Town of Goshen

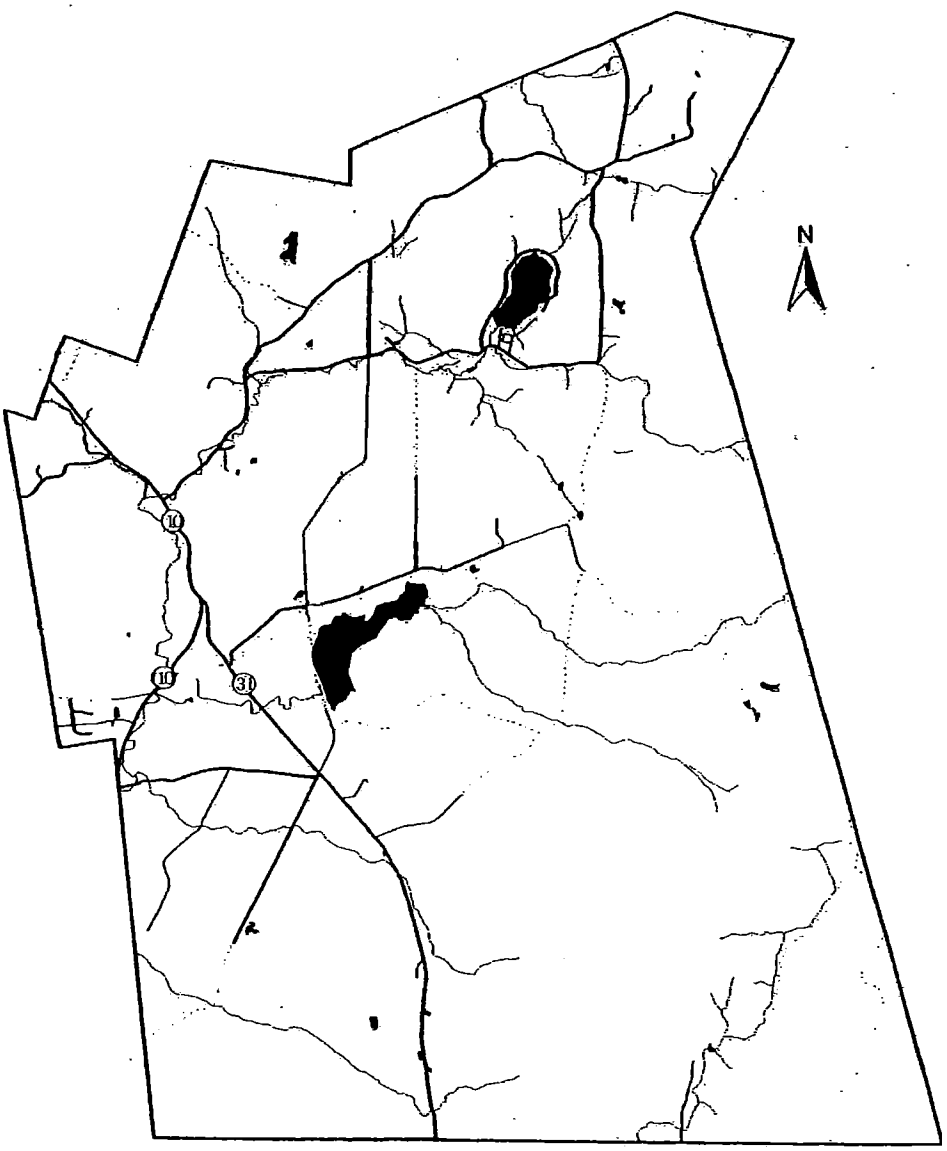

Subdivision Regulations

As Amended January 24, 2006

TABLE OF CONTENTS

PAGE		
1	SECTION 1 - ADOPTION	
	1.01	Authority
	1.02	Title
1	SECTION 2 - DEFINITIONS	
	2.01	Abutter
	2.02	Accessory Building
	2.03	Agent
	2.04	Annexation
	2.05	Applicant
	2.06	Application
2	2.07	Approval
	2.08	Board
	2.09	Building
	2.10	Building Development
	2.11	Building Site
	2.12	Day(s)
	2.13	Driveway
	2.14	Dwelling
	2.15	Dwelling Unit
	2.16	Easement
	2.17	Engineer
	2.18	Erosion
3	2.19	Final Plat
	2.20	Flood Limit
	2.21	Flood Prone Area
	2.22	Lot
	2.23	Lot Line
	2.24	Lot Size
	2.25	Master Plan
	2.26	Official Map
	2.27	Owner
	2.28	Parking Space
	2.29	Plat
	2.30	Preliminary Layout
	2.31	Sediment
4	2.32	Site
	2.33	Street
	2.34	Street, Local
	2.35	Street, Collector
	2.36	Street, Arterial
	2.37	Street, Frontage
	2.38	Subdivider
	2.39	Subdivision
	2.40	Subdivision, Minor
	2.41	Zoning Ordinance

TABLE OF CONTENTENTS CONTINUED

PAGE		
	SECTION 3 - APPLICATION PROCEDURE	
5	3.01	General Procedure
	3.02	Discussion Phase
	3.03	Preliminary Layout
6	3.04	Application
7	3.05	Hearing
	3.06	Action of the Board
	3.07	Failure to Act
8	3.09	Official Map
	3.10	Acceptance of Streets and Open Space
	3.11	Land Divided by Public Streets
	3.12	Annexation
9	3.13	Damage to Adjacent Public and Private Property, Drainage Facilities, Waterways, Streams and Brooks
10	SECTION 4 - PLAN REQUIREMENTS	
	General	
	4.01	Compliance with Master Plan, Official Map, Other Ordinances and Regulations
	4.02	Character of Land for Subdivision
	4.03	Premature Subdivision Development
11	4.04	Reserve Strips
	4.05	Preservation of Existing Features
	4.06	Lot and Site Layout
	4.07	Discussion Phase
12	4.08	Preliminary Layout
13	4.09	Final Plat
		A. Plat
14		B. Subdivision Grading and Drainage Plan
15		C. Subdivision Street and Utility Plan
16		D. Subdivision "As Built" Plans
	4.10	Minor Subdivision Requirements
17	4.11	Legal Data Required
	4.12	Filing Fee
	4.13	Performance and Maintenance Bonds
18	4.14	Lot and Site Layout
19	4.15	Soil Tests and Sewage Disposal
		A. General Standards for Sewage Disposal
20		B. Sewage Disposal Design
22	4.16	Street Design
24	4.17	Classification of Streets
25		Standards for Street Design

TABLE OF CONTENTS, CONTINUED

PAGE		
26	4.18	Street Improvements
	4.19	Design and Construction Criteria
	4.20	Parking
	4.21	Pedestrian Walks
	4.22	Utilities, Drainage
28	4.23	Sediment and Erosion Control
		a) General
		b) Standards
	4.24	Open Space Shown on Town Master Plan
29	4.25	Other Open Space
	4.26	Development of Open Space
30	4.27	Trees and Planting
	4.28	Fire Protection
31	4.29	Monumentation
	4.30	Wetlands
31A	SECTION 4A – OPEN SPACE DEVELOPMENT	
	4A.01	Definition
	4A.02	Standards
	4A.03	Procedure for Review
	4A.04	Determination of Density
31B	4A.05	Submission Requirements
31C	SECTION 4B – PHASED DEVELOPMENT	
	4B.01	Phased Development
31D	SECTION 4C – FUTURE SUBDIVISIONS	
	4C.01	Further Subdivision or Re-Subdivision of subdivided Land
32	SECTION 5 – ADMINISTRATION AND ENFORCEMENT	
	5.01	Modifications
	5.02	Interpretation
	5.03	Acceptance of Streets and/or Utilities
	5.04	Other Regulations
	5.05	Enforcement
	5.06	Penalties
	5.07	Appeals
	5.08	Validity
33	5.09	Amendment
	5.10	Effective Date
	5.11	Certification
34	APPENDIXES	
	A.	Major Subdivision Procedure
36	B.	Minor Subdivision Procedure
37	C.	Itemized List of Information Needed for Complete Plat Application for Major Subdivision Approval (Checklist #2)
43		Itemized List of Information Needed for Complete Plat Application for Minor Subdivision Approval (Checklist #1)
47		Flow Chart for Subdivision Approval
48	D.	Construction Details and Specifications for Land Development
49	E.	Typical Drainage Easement
51	F.	Special Flood Hazard Areas

TOWN OF GOSHEN
NEW HAMPSHIRE
SUBDIVISION REGULATIONS

SECTION 1 ADOPTION

1.01 Authority: Pursuant to the authority vested in the Goshen Planning Board by the voters of the Town of Goshen by vote of Town Meeting, March 14, 1967, and as adopted by the Town Meeting of March 11, 1969, and as amended, and in accordance with the provisions of Chapter 36: Sections 19-29, N.H. Revised Statutes Annotated, 1955, the Goshen Planning Board adopts the following regulations governing the subdivision of land in the Town of Goshen, New Hampshire.

1.02 Title: These regulations shall be known as the Town of Goshen Subdivision Regulations, and hereinafter referred to as "these regulations".

SECTION 2 DEFINITIONS

2.01 Abutter: Shall mean any person who owns land within 200 feet of the boundaries of the land under consideration. A way as defined in RSA 259:1 XXXV, shall not be considered to be a barrier, but shall be included in the distance requirement for purposes of determining whether a person is an abutter.

2.02: Accessory Building: Shall mean any combination of any materials whether portable, movable or fixed, having a roof and enclosed within exterior walls, built to form a structure for for the shelter of animals or property.

2.03 Agent: Shall mean a person retained by the owner to officially act on behalf of and in place of the owner.

2.04 Annexation: Shall mean the sale, transfer or other conveyance which involves merely an exchange of land among two or more adjacent owners and which does not increase the number of parcels, lots or owners.

2.05 Applicant: For the purpose of these regulations the applicant shall not be limited to the Owner, but shall include the owner's Agent.

2.06 Application: Shall mean Preliminary Layout or Final Plat application, submitted on a form supplied by the Planning Board, and which shall comply with the information required in Sections 3.04 of the Goshen Subdivision Regulations.

2.07 Approval: Shall mean recognition by the Planning Board, certified by written endorsement on the plat, that the Final Plat submission meets the requirements of these regulations and all other applicable ordinances and regulations.

2.08 Board: Shall mean the Planning Board of the Town of Goshen, New Hampshire.

2.09 Building: Shall mean any combination of any materials, whether portable, movable or fixed, having a roof and enclosed within exterior walls, built to form a structure for the shelter of persons.

2.10 Building Development: Shall mean the process of changing the character of the land from its existing condition to a more usable condition by the construction or placement of a building thereon.

2.11 Building Site: Shall mean that portion of a lot, tract or parcel of land upon which a single building is placed.

2.12 Day(s): Shall mean the calendar days between two (2) events. For example, in the case of a public notice for a hearing, the day the notice is made and the day of the hearing is held shall not be included in the total number of days.

2.13 Driveway: Shall mean an area located on a lot, tract or parcel of land, and built for direct access to a garage or off-street parking space, serving not more than two (2) adjacent lots or sites.

2.14 Dwelling: Shall mean a privately or publicly owned building containing a dwelling unit or dwelling units.

2.15 Dwelling Unit: Shall mean one or more rooms arranged for the use of one or more individuals living as a single housekeeping unit, with cooking, living, sanitary and sleeping facilities.

2.16 Easement: The land area created through authorization by a property owner for the use by another and for a specified purpose of any designated portion of his or her property.

2.17 Engineer: Shall mean the Town (Consulting) Engineer duly designated on behalf of the Town of Goshen, New Hampshire.

2.18 Erosion: The wearing away of the land surface by the action of wind, water or gravity.

2.19 Final Plat: Shall mean the final drawing or drawings on which the subdivider's plan of subdivision is indicated, prepared as required under the provisions of Section 4.09 hereof.

2.20 Flood Limit: Shall mean the land-water boundary of a watercourse flowing at its 100 year frequency as defined by a responsible public agency such as the U. S. Army Corps of Engineers or the U. S. Department of Agriculture Soil Conservation Service or by a private engineering firm qualified in hydraulics to provide accurate data when no existing data is available.

2.21 Flood Prone Area: Shall mean the area of land lower in elevation than the land-water boundary along a watercourse flowing at its 100 year frequency or it may be those soils classified by the National Cooperative Soil Survey as "soils subject to flooding".

2.22 Lot: Shall mean a parcel of land or any part thereof designated on a plat to be filed with the Register of Deeds by its owner or owners as a separate lot. For the purposes of these regulations, a lot shall have boundaries identical with those recorded with the Register of Deeds.

2.23 Lot Line: Shall mean the property line dividing a lot from a street right-of-way, a body of water or adjacent property.

2.24 Lot Size: Shall mean the total horizontal land area within the boundaries of a lot, exclusive of any land area designated for street purposes.

2.25 Master Plan: Shall mean the comprehensive plan or plan of development for the municipality as defined in RSA 36:13-15.

2.26 Official Map: Shall mean the adopted street or base map of the municipality as defined in RSA 36:16-18.

2.27 Owner: Shall mean the owner of record at the time a subdivision/annexation is proposed.

2.28 Parking Space: Shall mean an off-street space for exclusive use as a parking area for one motor vehicle, with a minimum size of 10' x 20".

2.29 Plat: Shall mean Final Plat, presented to the Goshen Planning Board for Final Approval.

2.30 Preliminary Layout: Shall mean a plan prepared and submitted to the board prior to preparing the Final Plat. See Section 4.08.

2.31 Sediment: Solid material, both mineral and organic, that is in suspension, is being transported, or has been moved from its site of origin by air, water or gravity as a product of erosion.

2.32 Site: Shall mean building site.

2.33 Street: Shall mean any state highway, or a highway, street, road, avenue, land and/or any other way which exists for vehicular travel, exclusive of a driveway. The word street shall include the entire right-of-way.

2.34 Street, Local: A street used primarily to give access to abutting properties.

2.35 Street, Collector: A street which serves primarily to carry traffic from local streets to arterial streets and to public and other centers of traffic concentration.

2.36 Street, Arterial: Shall mean a street or highway used primarily for heavy and/or through traffic.

2.37 Street, Frontage: Shall mean a minor local street parallel and adjacent to a street to provide access to abutting dwellings.

2.38 Subdivider: Shall mean the owner of record of the land to be subdivided, including any subsequent owner of record making any subdivision of such land or any part thereof.

2.39 Subdivision: Shall mean the division of a lot, tract, or parcel of contigious land into two or more lots, plats, sites or other divisions of land for the purpose, whether immediate or future, of sale, rent, lease, condominium conveyance or building development. It includes resubdivision and, when appropriate to the context, relates to the process of subdividing or to the land or territory subdivided. The division of a parcel of land held in common and subsequently divided into two or more parts shall be deemed a subdivision.

2.40 Subdivision, Minor: Shall mean the subdivision of land into no more than two (2) lots or sites, and requiring no new roads, utilities or other municipal improvements. This shall include a subdivision for the purposes of annexation in which there is merely a sale, conveyance, or exchange of adjacent land among two or more owners and which does not increase the number of owners or parcels of land.

2.41 Zoning Ordinance: Shall mean the Zoning Ordinance of the Town of Goshen.

SECTION 3 APPLICATION PROCEDURE

3.01 General Procedure: Whenever any subdivision of land is proposed, before any construction, land clearing or building development is begun, before any permit for the erection of any building in such proposed subdivision shall be granted and before any subdivision plat may be filed in the Office of the Register of Deeds of Sullivan County, the subdivider or the subdivider's authorized agent shall apply for and secure approval of such proposed subdivision in accordance with the following procedure. In general, the subdivider and the Planning Board shall follow the procedures outlined in "Appendix A" of these regulations, except where minor subdivision procedures (Appendix B) are permitted by the Board.

3.02 Discussion Phase: The subdivider may request a meeting with the Board to discuss the proposed subdivision and submit the discussion phase information as described in Section 4.07 of these regulations. The subdivider shall be guided by the Board as to the need for further meetings and the advisability of entering the preliminary layout stage. There is no time limit or application fee for this discussion phase.

3.03 Preliminary Layout: Request for conditional review of a preliminary layout may be submitted to the secretary of the Board by the subdivider or subdivider's agent on a form to be supplied by the Board. The application shall be accompanied by all information described in Section 4.08, items "a" through "q" inclusive. Such request and other required information shall be submitted not less than 15 days prior to a regular meeting of the Board.

The Board may suggest modifications to the preliminary layout at any stage within the preliminary layout review phase. The Board shall inform the subdivider or the subdivider's agent in writing of any modifications which it will require and further shall specify such modifications in its official records.

There is no time limit for the preliminary layout phase, but notification in accordance with Section 3.04 shall be given and the appropriate fees paid in advance of consideration by the Board.

Subsequent to the modification of the preliminary layout as prescribed by the Board, the subdivider may submit the preliminary layout and other required information to all local, county, regional, state or federal agencies whose review is required by law or by these regulations. Upon receipt of evidence of satisfactor

review of the preliminary layout from said agencies, the Board shall, upon receipt of an application for Final Plat Approval, hold a hearing.

3.04 Application: The subdivider or the subdivider's agent may apply for Preliminary Layout in order to review the proposed subdivision with the Board beyond the conceptual stage and to aid in the preparation of the Final Plat. The subdivider/subdivider's agent shall request an application for Preliminary Layout from the Board so as to provide the Board with the necessary information needed to identify and notify the abutters and the general public, describe and locate the proposal and identify the applicant.

The subdivider or the subdivider's agent shall apply for Final Plat Submission on a form furnished by the Planning Board. To have an application considered as complete for final plat submission, the application and plat shall conform to all of the requirements contained in Sections 4.09, 4.10, Appendix C and Appendix D, or the applicant may submit a plat and an itemized list of those items in Sections 4.09, 4.10, Appendix C and Appendix D that are felt not applicable to the specific proposal. The plat and all required information must be filed with the Secretary of the Board at least fifteen (15) days before a regularly scheduled Board meeting.

Formal submission of the Preliminary Layout and Final Plat application(s) shall be made at regularly scheduled Board meetings and shall include the names and addresses of the applicant and all abutters as indicated in Town records not more than five (5) days before the day of filing.

Notice to the applicant, abutters and the public shall be given as follows: The Planning Board shall notify the abutters and the applicant by certified mail, return receipt requested, of the date upon which the application will be formally submitted to the Board at a regularly scheduled public meeting. The notice shall be mailed at least ten (10) days prior to the meeting. Notice to the general public shall also be given at the same time by publication in a local newspaper and by posting in three (3) public places in town. The notice shall include a general description of the proposal which is the subject of the application and shall identify the applicant and the location of the proposal. All costs of notice, whether mailed, posted or published, shall be paid in advance by the applicant. Failure to pay such costs shall constitute valid grounds for the Planning Board to terminate further consideration and to disapprove the plat without a public hearing.

The Board shall issue to the subdivider, at the public meeting, a Receipt of Final Plat when all information as required in this section has been submitted.

3.05 Hearing: After the required filing fees have been paid and the Planning Board has issued a Receipt of Final Plat, no plat shall be approved or disapproved by the Board without affording a hearing thereon. The applicant and all abutters shall be notified of said hearing by certified mail, return receipt requested, mailed not less than ten (10) days before the date fixed therefor. The notification shall state the date, time, place and purpose of such hearing. Public notice of such hearing shall be posted in at least three (3) public places in town and in a newspaper of general circulation in the town at least ten (10) days prior to said hearing. All costs of notice, whether mailed, posted or published, shall be paid in advance by the applicant. Failure to pay such costs shall constitute valid grounds for the Board to terminate further consideration and to disapprove the plat without a public hearing.

The Board shall begin formal consideration of the application within thirty (30) days after receipt of the completed application.

3.06 Action of the Board: Within ninety (90) days of receipt of all material required for the Final Plat and issuance of Receipt of Final Plat, the Board shall approve, modify and approve, or disapprove the Final Plat, unless the time for action has been extended an additional ninety (90) days by the Selectmen of the Town, or the applicant has consented in writing to an extension. Reasons for disapproval of a Final Plat shall be stated in the records of the Board, a copy of which will be provided to the applicant. Approval shall be certified by written endorsement on the plat and signed by the Chairman and/or the Secretary of the Planning Board.

3.07 Failure to Act: Upon failure of the Board to approve or disapprove the plat within 90 days of Receipt of Final Plat, when no extension has been granted, the applicant may obtain from the Selectmen an order directing the Board to act within fifteen (15) days. Failure of the Planning Board to act upon such order of the Selectmen shall constitute grounds for the Superior Court, upon petition of the applicant, to issue an order approving the application, if the Court determines that the proposal complies with existing subdivision regulations, zoning and other ordinances, and the provisions set forth in R.S.A. 36:23-IV. If the court determines that failure to act within the time specified was the fault of the Planning Board and was not justified, the court may order the Planning Board to pay the applicant's reasonable costs, including attorney's fees, incurred in securing such order.

3.08 Filing with Register of Deeds: An approved subdivision plat shall be recorded with the Register of Deeds of Sullivan County by the subdivider within thirty (30) days of Final Approval and prior to any sale or transfer of land within the subdivision. A copy shall be provided to the Planning Board indicating the volume and page where registered.

3.09 Official Map: If there exists an Official Map of the Town, the recordation of plats which have been approved as provided herein shall, without further action, modify the Official Map in accordance therewith. Recordation of an approved subdivision plat shall not constitute acceptance by the Town of any street, easement or open space shown thereon.

3.10 Acceptance of Streets and Open Space: No street or open space will be accepted by the Town until such time as all improvements have been carried out as shown on the Final Plat, in accordance with the requirements of these regulations, and subject to any conditions established by the Planning Board at the time of Final Plat Approval. Acceptance of a road shall require the vote of the Town at Town Meeting or by a vote of the Selectmen.

3.11 Land Divided by Public Streets: Any transfer, conveyance or sale of land in one ownership but already divided into lots or parcels of land by an existing and maintained public street may be considered by the Board in its discretion to not be a subdivision for the purposes of these regulations and may therefore be exempted by the Board from conforming to the procedures and requirements set forth herein.

3.12 Annexation: Any subdivision for the purpose of annexation as defined in Section 2 shall be submitted to the Board for review. The Board, upon reviewing the facts and merits of the proposal, may in its discretion waive compliance with the requirements of these regulations, providing, however, that notice to abutters shall be given prior to approval of the application and the following conditions shall be met in all cases:

1. A general map shall be prepared and submitted to the Board showing the original boundaries of the adjacent parcels in question.
2. A detailed survey map shall be prepared and submitted to the Board showing the new property line or lines created as a result of the Annexation.
3. A deed restriction shall be placed in the body of the deed or other instrument of transfer stating as follows: "The grantee(s) by virtue of acceptance of this deed agree that the premises hereby conveyed shall not be deemed or considered a separate lot of record, but shall be regarded as merged into and made an integral part of the contiguous lot of land previously owned by the grantee(s) so that the same shall hereafter be one combined single lot of record."

4. A statement shall be placed at the end of the deed or other instrument of transfer stating as follows: "The above transfer constitutes an annexation of the tract herein conveyed to the tract conveyed to the said_____ by deed of_____, dated_____, 19__, and recorded in the Sullivan County Register of Deeds at Volume____, Page___ and, therefore, does not require approval of the Planning Board of the Town of Goshen, New Hampshire," but which shall be signed by the Ciarman and/or Secretary of the Board.

3.13 Damage to Adjacent Public and Private Property, Drainage Facilities, Waterways, Streams and Brooks: If, at any time before all public improvements are finally accepted by the Town and before the bond is totally released, should any condition within the approved subdivision cause damage to adjacent public or private property, drainage facilities and waterways, streams and brooks, including but not limited to soil erosion and damage to standing vegetation, the Board shall notify the subdivider in writing of such damage and have the subdivider correct all damage at his/her own expense. If the subdivider does not substantially correct all damage within sixty days of notice the Board shall notify the subdivider's bonding company and take all necessary action to protect and preserve the Town of Goshen rights and interests.

SECTION 4 PLAN REQUIREMENTS

General

4.01 Compliance with Master Plan, Official Map, Other Ordinances and Regulations: All subdivisions shall be in harmony with the Master Plan, and shall be in conformance with the Official Map, when such exists; and shall be in conformance with all other applicable State and local by-laws, ordinances and regulations.

The applicant shall familiarize himself/herself with all State and Town regulations relative to health, buildings, roads and other pertinent data, so that the applicant is aware of the obligations and standards with which the proposed subdivision must comply.

No subdivision of land shall be made, and no land in any proposed subdivision shall be sold, transferred, leased, altered or developed, and no street or utility construction shall be started until a Final Plat, prepared in accordance with the requirements of these regulations, has been approved by the Board, and other required permits have been issued. The penalty for transferring lots in an unapproved subdivision shall be as prescribed in RSA 36:27.

The applicant may use the assistance of the Board before preparation of the application for Preliminary Layout or Final Plat. No building permit shall be granted prior to review and approval of said subdivision by the Planning Board.

4.02 Character of Land for Subdivision: Land of such character that, in the judgement of the Board, cannot be safely used for building development purposes because of exceptional danger to health or peril from fire, flood, poor drainage, excessive slope, or other hazardous conditions, shall not be platted for residential, commercial or industrial subdivision, nor for such other uses as may increase the danger to life, property, or aggravate the flood hazard. All proposals shall be consistent with the need to minimize flood damage. Land with inadequate characteristics or capacity for sanitary sewage disposal shall not be subdivided for residential, commercial or industrial subdivision purposes unless connected to a municipal sewage system.

4.03 Premature Subdivision Development: Scattered or premature subdivision of land as would involve danger or injury to health, safety, or prosperity by reason of lack of water supply, drainage, transportation, school, fire protection, or other public services, or necessitate an excessive expenditure of public funds for the supply of such services shall not be approved by the Board.

4.04 Reserve Strips: No privately owned reserve strip, except open space proposed to be deeded to the Town of Goshen or to a homeowners association within the subdivision shall be permitted which controls access to any part of the subdivision to any other parcel of land from any street, from any land dedicated to public use, or which may be so dedicated.

4.05 Preservation of Existing Features: The applicant shall give due regard to the preservation and protection of existing features, trees, scenic points, brooks, streams, rock out-croppings, water bodies, stone walls, boundary markers, other natural resources and historic landmarks.

4.06 Lot and Site Layout: The layout of lots and sites shall conform to the specifications of the Official Map and the requirements of the Zoning Ordinance where in force and shall be appropriate for the intended construction. If allowed in the zoning regulations, a subdivision plat may be designed for cluster or planned unit development, provided all requirements of such zoning regulations are met. The layout of lots and sites shall be in conformance with Section 4.14 of these regulations. At the earliest practical stage, the applicant shall clearly place on the ground survey stakes or ribbons marking the corners of all proposed lots and the center line of all proposed streets. In all cases the Final Plat will be approved and all construction will be properly laid out prior to any construction on the property.

4.07 Discussion Phase: Discussion phase maps may be drawn in pencil; data may be tentative but shall be sufficiently clear to show all existing conditions on the property to be subdivided. Maps shall be at a scale of no more than 200 feet per inch, unless otherwise specified by the Board and should follow the following guideline.

a) Property map for the entire area of the parcel being subdivided plus an additional 200 foot area completely around said parcel, showing perimeter boundary of said parcel, land use designation according to the Master Plan, zoning designation according to the Zoning Ordinance, topography, water areas (both permanent and intermittent streams, rivers, ponds, lakes marshes), foliage lines, major rock outcroppings, existing roads, easements, water supply wells, structures, and other existing physical features.

b) Property location map (at scale of municipal base map (1"=1000'), shown as inset on property survey map) showing proposed subdivision in relation to major roads, community facilities and utilities of the Town.

c) The Board may require further detailing of information and additional meetings before advising the subdivider to proceed with preliminary layout design.

d) Soil survey mapping.

4.08 Preliminary Layout: The preliminary layout may be drawn in pencil, and four (4) paper print copies submitted. Dimensions may be approximate; the data may be tentative, but shall be sufficiently clear to illustrate all conditions and establish the basis and clarify the design requirements for the subdivision Final Plat. Maps shall be at a scale of no more than 100 feet per inch unless otherwise specified by the Board:

a) Name of municipality and subdivision, name and address of the subdivider and agent;
b) Boundaries and area of the entire parcel, whether or not all land therein is to be subdivided; north point, bar scale, date and dates of any revisions;
c) Names and addresses of abutting property owners, the Volume and page of recording, subdivisions and buildings within 200 feet of the parcel of land to be subdivided, and intersecting roads and driveways within 200 feet of the parcel of land to be subdivided;
d) Existing and proposed street right-of-way lines, widths of streets, proposed names of new streets, existing and proposed lot lines;
e) Location of existing and proposed easements, deed restrictions, buildings, accessory buildings, building setback lines, parks and other open space, water courses, flood prone areas, large trees, foliage lines and significant natural and man-made features, water mains, sanitary sewers, storm water drainage lines, drainage structures and drainage ways;
f) Existing and proposed telephone, electricity, gas, water, sewer, and fire protection lines and other facilities and/or utilities (exact location and numbers of all utility poles shall be specified);
g) Boundaries and designations of Zoning Districts lying within the subdivision, municipal boundary if any, land use designation from Master Plan;
h) A general property location map at the scale (1"=1000') of the Official map or municipal base map, locating exactly the subdivision boundary and proposed streets in relation to at least two existing intersecting streets or other features shown on the official map;
i) Soil mapping units and unit boundaries, soil tests and sewage disposal information as required in Sections 4.07 and 4.15;
j) A statement of conditions of land as to soil suitability for development;

k) A statement of the work required on existing streets to meet the minimum standards set herein;
l) A statement as to the compliance of the proposed lots with zoning requirements. If any lots do not comply but are covered by zoning variances, the statement should include reference to such variance.
m) Existing and future subdivisions, if any, in and adjacent to the subject subdivisions;
n) A statement and contours in sufficient detail to indicate clearly the method of storm water drainage on and off the subdivision, methods of sanitary sewage disposal and water supply;
o) Watershed areas, preliminary drainage analysis and preliminary drainage computations;
p) Preliminary road profiles;
q) Approval, as prescribed by law, from any other municipal, state or federal agency which may have jurisdiction.

4.09 Final Plat: The Final Plat shall be in permanent black ink on a permanent reproducible polyester film. It shall be submitted in two (2) polyester film copies and four (4) blue or black line paper prints. Sheet sizes shall be in accordance with requirements of the Register of Deeds but not smaller than 20" x 30", unless otherwise determined and agreed to by the Board. Maps shall be at a scale of no larger than 100 feet per inch, unless otherwise specified by the Board. Space shall be reserved on the Final Plat for endorsement by the Planning Board and all appropriate agencies. The Final Plat shall be consistent with the criteria stated in the preliminary layout. The Final Plat shall contain the following statement: "The Subdivision Regulations of the Town of Goshen are a part of this plat, and approval of this plat is contingent on completion of all the requirements of said Subdivision Regulations, excepting only any modifications made in writing by the Board and attached hereto." The Final Plat shall contain or be accompanied by the following maps and information:

A. Plat

1. Name of municipality and subdivision, name and address of the subdivider and designer;

2. Boundaries and area of the entire parcel of land, whether or not all land therein is to be subdivided (in whatever manner is practical, the subdivision boundary shall be referenced to some point, i.e., public street intersection or U.S.G.S. bench mark); north point, bar scale, date and dates of any revisions; the survey shall be of third order (closed tape and transit) with a minimum error of closure of 1/10,000 unbalanced;

3. Names and addresses of abutting property owners and the Volume and page of recording, subdividers and buildings within 200 feet of the parcel of land to be subdivided;

4. Existing and proposed street right-of-way lines, dimentions of tangents, chords and radii; accurate location of all monuments set at street intersections; points of curavture and tangency of curved streets and at angles of lots; names of existing and proposed streets;

5. Existing and proposed lot lines, angles and dimensions, lot sizes in square feet and acres, consecutive numbering of lots, iron pins at lot corners;

6. Location of existing and proposed easements, deed restrictions, building setback lines, parks and other open space, watercourses, and significant natural and man-made features; Volume and page where recorded;

7. A general site location map (at scale of municipal base map and/or tax map) locating exactly the proposed subdivision boundary in relation to major roads and community facilities of the Town;

8. Name and seal of engineer and/or land surveyor licensed by the State of New Hampshire;

9. A written acknowledgement of the subdivider's responsibility for maintenance of easement areas, and the assumption by the subdivider of liability for injuries and damages that may occur on any land to be dedicated for public use, until such land has been legally accepted by the Town;

10. If a subdivision is to be served by public water supply or by public sewers, a statement from the municipal department or company involved attesting to the availability of such service.

As part of the Final Plat submission, the subdivider or the subdivider's agent may be required by the Board to submit any or all of the following:

B. Subdivision Grading and Drainage Plan

This plan shall be submitted on a separate sheet or sheets and shall provide the following information for the entire area of the proposed subdivision, unless there is a determination by the Board that a lesser area is sufficient;

1. Basic street and lot layout, with all lots numbered consecutively.

2. Location of all existing buildings and approximate location of proposed buildings, if known.

3. Contours of existing grade at intervals of not more than five (5) feet. Intervals less than five (5) feet may be required depending on the character of the topography. Contour lines shall extend a minimum of 200 feet beyond the subdivision boundary. Contour lines are to be actual and not interpretations of U.S.G.S. maps.

4. Final identification, location, elevation, grades and/or contours at intervals of not more than two (2) feet (less interval may be required depending on topography) for the existing and proposed drainage ways, drainage easements, drainage structures and water bodies.

5. Final identification and relative location of proposed soil erosion and sediment control measures and structures.

6. Final drawings and specifications for each proposed soil erosion and sediment control measure in accordance with guidelines acceptable to the Planning Board.

7. Final drawings, details, and specifications for proposed flood hazard prevention measures and structures and for proposed storm water retention facilities.

8. Final slope stabilization details and specifications.

9. A timing schedule indicating the anticipated starting and completion dates of the subdivision development and the time of exposure of each area prior to the completion of effective soil erosion and sediment control measures.

NOTE: The subdivider shall bear the final responsibility for the installation and construction of all required drainage, slope stabilization, soil erosion and sediment control measures and structures according to the provisions of these regulations.

C. Subdivision Street and Utility Plan

This plan shall be submitted on a separate sheet or sheets and provide the following information:

1. Complete plans and profiles of all proposed streets including but not limited to:

a. Horizontal and vertical curve data at the street centerlines;
b. Street stationing every 50 feet;
c. Intersection, turnaround, and/or cul-de-sac radii;
d. Statements and/or typical sections of proposed streets.

2. Complete plans and profiles of all proposed sanitary and storm sewers, including the following:

   a. Invert elevations, original and finished ground profiles above these sewers and top of manhole elevations;

   b. Profiles and grades of storm sewer lines and inlets;

   c. Type of material, class used, and proposed grades.

3. Location and details of all existing and proposed underground utilities, including water mains, gas mains, telephone, electric on and adjacent to the land to be subdivided. Culverts, bridges, etc. are also to be included with all watershed calculations.

4. A statement as to: (when applicable)

   a. The flow available on existing water mains.

   b. The proposed number of units and anticipated sanitary sewer flow.

   c. The available storm water facilities downstream of this subdivision.

D. Subdivision "As Built" Plans

In subdivisions requiring construction of roads or other utilities, a Plan shall be submitted to the Board after construction has been completed and before release of the bond or other security, certifying that roads, and/or other utilities, have been constructed as shown on the plan and in accordance with the Final Approval. This plan shall be drawn to scale and shall indicate, by dimensions, angles and distances, as applicable, the location of sewer and drain Y-branches, laterals, manholes, catch basins, hydrants, valves, curb shut-offs, road profiles, and center line elevations and final grading plan showing swales and ditches. Plan shall show easements, roadways and open space.

As Built plans shall be submitted by the subdivider to the Town on a sepia print or equal with two (2) paper prints.

4.10 Minor Subdivision Requirements:

Submission procedure and documents for minor subdivisions shall be as required for Final Plat in Sections 3.04, 3.05, 3.06 and 4.09 of these regulations, with the following exceptions:

a. The Board may consider the requirement of a perimeter survey of the entire parcel of land and require specific data only for that lot being subdivided. This consderation would generally apply only in the case of a small lot (5 acres or less) being subdivided from a large lot (50 acres or more).

b. The Board may consider the requirements of: existing and proposed contours; existing and proposed plans for telephone, electricity, and gas utilities; proposed storm drainage, drainage analysis map and watershed computations; and proposed methods of supplying water.

c. The Final Plat shall include a general plan map inset which indicates the size and shape of the entire parcel of which those lots for which sale or building development is contemplated are a part.

4.11 Legal Data Required:

Where applicable to a specific subdivision, the following are required, in form as approved by the Town Attorney, prior to approval of the Final Plat:

a. Agreement to convey to the Town land to be used for streets, open space and other public purposes, with transfer of title to such interests to be effective on such date as the Town accepts such land.

b. Description of easements and rights-of-way for public purposes over property to remain in private ownership.

c. Descriptions of easements to drain onto or across other property, whether public or private, including a street.

d. Performance and maintainence bonds, described in Section 4.13 hereafter

4.12 Filing Fee:

The Planning Board shall, from time to time, establish a schedule of fees. The Planning Board shall hold a public hearing on proposed fees. Notice of the day, time, place and purpose, together with a statement as to where a copy of the proposed schedule of fees may be examined, shall be posted in two public places and published in a newspaper of general circulation in the Town of Goshen at least ten (10) calendar days before the public hearing. After the close of the public hearing, the Board shall take action on the proposed schedule of fees. If the Board approves the proposed schedule of fees, then such fee schedule shall go into effect as of that date except to the extent that the planning Board in its resolution provides otherwise.

4.13 Performance and Maintenance Bonds:

Except in the case of a subdivision in which each lot is on an existing town road, and no improvements to facilitate the development are required, no subdivision plat filed with the Board shall be approved until the applicant files with the Board:

1. A surety bond, issued by a surety company authorized to do business in the State of New Hampshire; or
2. A letter of credit, cash or savings bank book, properly endorsed to the Town; or
3. A performance bond, naming the Town as beneficiary.

In all three cases the amount should be sufficient to cover the costs of all improvements, based on an itemized engineer's estimate, "As-Built" plans, monumentation, legal data, inspection fees or other costs related directly to the subdivision.

In the case of electric lines or other utilities to be installed by a public utility corporation or a municipal department, a statement shall be received in writing from such public utility, corporation or municipal department that the work will be done within a reasonable time and without expense to the Town and that the utilities will be placed underground.

Each approval of a Final Plat shall contain a time limit within which streets and public improvements shall be completed, not to exceed three (3) years, unless extended with the owner's consent by the Planning Board in writing.

The performance guaranty shall not be released until the Planning Board has certified completion of the public utilities and improvements in substantial accordance with the requirements, and deeds covering land to be used for public purposes, easements and rights-of-way over property to remain in private ownership, and rights-to-drain onto or across private property are submitted in a form satisfactory to the Town Attorney. All recording fees shall be borne by the subdivider.

Upon satisfactory completion of all items noted above, it shall be the responsibility of the subdivider to provide the Town with a Maintenance Bond. It shall be satisfactory to the Town as to form, sufficienty, manner of execution and in an amount to be not less than ten (10) percent of the costs determined above, for a period of not less than one (1) year after satisfactory completion of the subdivision so as to assure its quality.

4.14 Lot and Site Layout: When laying out or planning a subdivision, the following regulations shall govern the layout of lots and sites:

a. The lot size, width, depth, shape, orientation, and the minimum building setback lines shall be appropriate for the location of the subdivision and for the type of development and use contemplated, and shall be in conformance with the zoning regulations of the Town of Goshen.

b. All lots shown on the Final Plat must conform to, or exceed, the minimum area and dimension requirements of the Zoning Ordinance if one exists.

c. All lots or sites shall abut on a regularly maintained public street or on a street built and maintained to Town specifications, with a minimum frontage of 175' (onehundred-seventyfive feet). (Revised 7/88)

d. Corner lots shall have extra width sufficient to permit a setback on each street of the same width.

e. Where extra right-of-way width has been indicated for widening of existing streets, lots shall begin at such extra width line, and all setbacks shall be measured from such line.

f. Side lines of lots shall be at right angles to straight streets, and radial to curved streets.

g. Where there is a question as to the suitability of a lot or lots for their intended use due to factors such as rock formations, flood conditions or similar circumstances, the Board may, after adequate investigation, require modification of such lots.

h. Block length and width or acreage within bonding roads shall be such as to accomodate the size of lot required in the area by the Zoning Ordinance, if one exists, and to provide for convenient access, circulation control and safety of street traffic.

i. Lots fronting on two parallel streets will not, in general, be approved.

j. Where lots abut existing Town, or Federal streets, marginal access roads or reversed frontage approach should be used with a minimum number of driveways and/or streets entering on to these streets.

4.15 Soil Tests and Sewage Disposal:

A. General Standards for Sewage Disposal

The result of applying these standards will be to prevent the creation of subdivision lots which will not support individual sewage disposal systems. All such land will have to be combined with the more usable land and included in one or more acceptable lots. The following standards will be adhered to:

1. They will not contaminate any dringking water supply.
2. They will not give rise to a public health hazard by being accessible to insects, rodents or other possible carriers which may come into contact with flood or drinking water.

3. They will not give rise to a public health hazard by being accessible to children.
4. They will not violate laws or regulations governing water pollution or sewage disposal.
5. They will not pollute or contaminate the waters of any bathing beach, or stream used for public or domestic water supply purposes, or for recreational purposes.
6. They will not give rise to a nuisance due to odor or unsightly appearance.

B. Sewage Disposal Design

Where individual, on-lot sewage disposal systems are proposed, the subdivision shall conform to the following submission and design requirements regarding soils and sewage disposal:

1. No subdivision of land will be approved by the Board where it creates a lot or site that will not meet the minimum standards and design requirements imposed by the State of New Hampshire Water Supply and Pollution Control Commission, municipal regulations, and the requirements listed below, unless the proposed subdivision will be connected to a municipal sewage system or other state-approved central sewage system.

2. The Board may require that all soil tests (test pits and percolation tests) be performed in the presence of and certified by an official representative of the Town duly designated to inspect soil tests for the purpose of these regulations and shall be submitted as part of the discussion phase and shall be submitted with subsequent submissions of the preliminary layout and Final Plat.

3. Soils data shall consist of available soil survey information and soil test pit results (test pits and percolation tests). The subdivider shall furnish a soil survey report and plan covering the entire area of the proposed subdivision prior to subdivision approval by the Board. The soil survey plan shall show the location of the soil mapping units and soil mapping unit boundaries as indicated on the most recent town or county Soil Survey Conservation Service. A legend shall be prepared and placed directly on the soil survey plan, such legend showing soil mapping unit symbols, soil names, depth to seasonal high water table, depth to bedrock, permeability, soil limitation for on-lot sewage disposal, and such other information as the Board and/or their consultants may deem appropriate.

The delineation of the soil mapping units and unit boundaries and the preparation of said legend shall be certified by the Sullivan Conservation District and signed by its authorized representative.

4. The number and location of percolation tests and test pits shall be determined in consultation with the Board and dependent on the submission phase. All percolation tests and test pits attempted shall be logged, recorded, located and dated on the soil survey plan.

5. All test pits shall be dug to a depth of ten (10) feet or refusal if ledge. Depth to ledge, clay, hardpan layers, existing and expected seasonal high water table shall be recorded on the soil survey plan.

6. Sufficient test pits shall be dug to insure that an area of twice the design leach field area is present on each proposed lot with a natural soil depth of at least five (5) feet to bedrock. This area shall not be used for buildings, sewage treatment and septic effluent disposal.

7. The bottom of a proposed leaching bed or trench, and the floor of a leaching cesspool or leaching pit shall be a minimum of eight (8) feet above any bedrock.

8. In soils having a hardpan, the sewage disposal system must be so designed that:

   a. Subsurface and surface runoff waters be diverted from the leachbed area.
   b. Size of the leach field be designed so as to accommodate the slow permeability within the hardpan.
   c. On Woodbridge and Paxton Loams all seepage beds, trenches, or pits shall be located no closer than seventy-five feet from any roadside ditches or drainage ditches that are on the downhill side below the proposed system.

9. Any soil with a seasonal high water table or within four (4) feet of the natural ground surface shall not be used for the disposal of septic tank effluent. Drainage where feasible and acceptable to the Board, may be utilized to overcome this situation.

10. The bottom of a proposed leaching bed or trench and the floor of a leaching cesspool or leaching pit shall be a minimum of four (4) feet above any seasonal high water table.

11. Any soil with a percolation rate of over two inches per hour shall not be used for the disposal of septic tank effluent.

12. Any land area having a natural slope of 12 percent (12 feet vertical to 100 feet horizontal) or greater shall not be altered or used for the disposal of septic tank effluent unless the system is designed by a registered (with the State of New Hampshire) engineer and overcomes the adverse land conditions to the satisfaction of the Board.

13. Fill may be added to meet the standards imposed by 6, 7, and 9 above but may not be added to correct for any of the other above listed conditions. Fill material must be approved by the local responsible official or board. Percolation tests will be required in the undisturbed natural ground to determine design of the leaching bed or trench.

14. No septic system leaching bed or trench, or leaching cesspool or leaching pit shall be allowed on soils subject to flooding unless the individual or parties responsible for the system can provide the system will, during periods of flooding from adjacent streams and rivers, comply with the six basic standards of these regulations.

15. All subsurface sewage disposal systems must be designed, approved, and constructed in accordance with the most recent regulations and standards of the New Hampshire Water Supply and Pollution Control Commission.

16. The subdivider shall arrange to perform all tests required in the section under the supervision of the New Hampshire Water Supply and Pollution Control Commission and at locations recommended by its agent.

4.16 Street Design: Proposed streets shall be in harmony and conformance with existing and proposed streets, as shown on the Town Master Plan or Official Map. Street patterns shall give due consideration to contours and natural features. Where required by the Board, provision shall be made for the extension of the street pattern to abutting undeveloped property. Every proposed street in a subdivision shall be laid out and constructed as required by the following standards:

1. All streets shall be constructed, and all bridges, culverts, drainage structures, storm sewers, gutters, drainage ditches, and other improvements required by the subdivision plat and accompanying documents, shall be installed in conformance with the standards and specifications adopted by the Town.

2. The plan of any proposed subdivision shall show all work required to connect and complete the improvements and utilities between the proposed street pattern and any connecting street in an existing subdivision.

3. Where a subdivision abuts an existing street with an inadequate alignment, or right-of-way width, the subdivision plat shall include in the street dedication all land needed to meet the standards established by these regulations, and as approved by the Board.

4. Where a proposed subdivision abuts an existing subdivision, the subdivider shall make every attempt to design the street system of the proposed subdivision to connect with dead-end or "stub" streets of the existing subdivisions.

5. Subdivision streets shall be so laid out as to provide a curvilinear street pattern.

6. The layout of the street pattern shall be based upon a local street system connected to a collector street system connected to an arterial system.

7. Local residential streets shall be designed so as to discourage through traffic.

8. Local and collector streets shall not intersect with arterial streets less than eight hundred (800) feet apart, measured from center line to center line.

9. Except where it is impracticable, because of the character of the land, streets shall intersect so that within seventy-five (75) feet of the intersection the street lines are at right angles and in no case less than seventy-five (75) degrees. The grade within one hundred (100) feet of an intersection shall not exceed two (2) percent. No structure or planting shall impair corner visibility.

10. Multiple intersections involving a junction of more than two (2) streets shall be prohibited.

11. The minimum distance between center line offsets at street jogs shall be one hundred fifty (150) feet.

12. Permanent dead-end streets should, where possible, not exceed one thousand (1000) feet in length, and shall terminate in a suitable turnaround as specified in Appendix D, Drawing 3 and 4.

13. Temporary dead-end streets, where future extension to another outlet is approved by the Board, or where indicated on the plan, may exceed one thousand (1000) feet in length. In such cases, the full width of the right-of-way to the subdivision property line shall be reserved as a street right-of-way.

14. If a dead-end street is of a temporary nature, a turnaround shall be provided and provisions made for future extension of the street through to adjacent property and reversion of the excess right-of-way to the adjoining properties.

15. The following standards shall apply to cul-de-sac streets:

    a. The turnaround at the end of a cul-de-sac street should be located so that it drains toward its entrance and off to the side of the road.
    b. Unless there is the expectation of extending the street through to the adjoining property, a cul-de-sac street should never be brought to the property boundary line, but should be placed so that the lots can back on the property line of the subdivision.

16. No street shall have a name which will duplicate or closely duplicate names of existing streets. The continuation of an existing street shall have the same name.

4.17 Classification of Streets: The classification of existing streets shall be as defined in the Town Master Plan or Official Map or by the Board where such Master Plan or Official Map does not exist. The classification of new streets shall be as determined by the Board in accordance with the following table. The following standards of design shall apply to streets related to subdivision.

(see next page for table)

STANDARDS FOR STREET DESIGN

	Local (1)		Collector		Arterial
	Minor	Major	Minor	Major	
Average Daily Traffic (2)	0-50	50-100	100-250	250-400	400-up
Minimum Right-of-Way (4)	50	60	70	80	100
Minimum Travel Surface Width in Feet (4)	20	20	20	24	Variable
Minimun Shoulder Width in Feet Each Side (4)	2	2	4	4	Variable
Minimum Distance from Center of Road to Center of Ditch in Feet (4)	16	16	18	Variable	Variable
Minimum Horizontal Curve Radii in Feet	100	100	150	300	500
Minimum Vertical Curve Length in Feet	100	100	100	200	Variable
	In no case less than 20' for 1% difference in grade		In no case less than 30' for each 1% difference in grade		
Minimum Length of Tangents Between Curves	100	100	100	200	Variable
Maximum Grade	10%	10%	8%	8%	5%
Minimum Grade	0.5%	0.5%	0.5%	0.5%	0.5%
Minimum Vertical Sight Distance (3)	200'	200'	250'	250'	300'

(1) Local streets cover not only lightly developed through streets, but also deadend, cul-de-sac and marginal access streets.
(2) Shall be future anticipated traffic. (Assuming 8 trips per day per dwelling units.)
(3) Sight distance shall be measured between two points along the centerline of the street on a straight line entirely within the street right-of-way and clear of obstructions, one of the points to be at the surface and the other 4½ feet above the surface.
(4) All cross-section horizontal distances shall be measured perpendicular to straight-line sections and radial to curved sections.

The Board may modify the maximum and minimum gradient for short lengths of streets where in its judgement, existing topographic conditions or the preservation of natural features indicate that such modification will result in the best subdivision of land.

The Board may require greater width of right-of-way where, in its judgement, the demands of present or future traffic make it desirable or where topographic conditions create a need for greater width for grading.

4.18 Street Improvements: In rural areas, streets will have a minimum travel surface width as prescribed previously, with shoulders not less than two (2) feet wide. The Board may require a greater travel surface width and shoulders for Arterial and Collector streets. In urban or village areas, the Board may require a greater width of right-0f-way and paving, together with curbs and sidewalks.

In the case of subdivisions adding sufficient traffic to change the road classification, any existing street which provides either frontage to new lots or access to new streets shall meet the minimum standards established in Section 4.17 for such streets. Where a subdivision requires undue expenditures by the Town to improve existing streets to conform to minimum requirements, the Board may disapprove such subdivision until the Selectmen shall certify that funds for the improvements have been assured by the municipality.

4.19 Design and Construction Criteria: (See "Appendix D")

4.20 Parking: All subdivision development may require off-street parking to be provided at the rate of at least two (2) parking spaces per dwelling unit. In order to provide for the most efficient means of road maintenance, snow plowing and access by emergency, police and fire vehicles, no parking of vehicles within the street shall be permitted.

4.21 Pedestrian Walks: Where necessary, in the judgement of the Board, rights-of-way for pedestrian travel and access may be required between subdivisions or its parts, or between a subdivision and public property.

4.22 Utilities, Drainage: All subdivisions shall make adequate provisions for water supply, storm water and sanitary sewage disposal, and required utilities and improvements. The Board may require the extension of public water and sewers to and within a proposed subdivision, without cost to the Town, where existing lines are, in the sole judgement of the Board, within a reasonable distance of the proposed subdivision.

The subdivider shall install laterals from all utilities in the street right-of-way to ten (10) feet beyond the street property line of each building lot.

All public utilities and facilities, such as sewer, gas, electrical, and water systems shall be located, elevated, and constructed to minimize or eliminate flood damage. All new or replacement water supply systems and/or sanitary sewage systems shall be designed to minimize or eliminate infiltration of flood waters into the systems and discharges from the systems into flood waters. On-site waste disposal systems shall be located so as to avoid impairment of the water supply system and/or sanitary sewage system or contamination from them during flooding, pursuant to N.H.R.S.A. 36:21.

All such utility system installations shall be at the expense of the subdivider and shall be installed under the supervision of the appropriate Town agency.

An adequate surface storm water drainage system for the entire subdivision area shall be provided. Adequate drainage shall be provided so as to reduce exposure to flood hazards. Storm drainage shall be carried to existing water courses, or connect to existing watercourses, or connect to existing storm drains. If the storm water drainage system creates any additional flow over any adjacent property, the subdivider shall obtain an easement therefor from the adjacent owner and shall hold the Town harmless from any claims for damage resulting therefrom. The subdivider shall also provide the Town with a Drainage Easement as provided in Appendix E of these regulations.

For the purposes of preparing drainage plans, the following basic design criteria shall be utilized: Storm sewers and subdivision drainage facilities shall be based upon a design flow with a minimum return interval of 10 years. The design of natural watercourse channels shall depend upon the drainage area according to the following criteria:

DESIGN RETURN INTERVALS FOR NATURAL WATERCOURSES

Drainage Area	Recurrence Interval
Above 20 square miles	100 years
Between 4 and 20 square miles	50 years
Less than 4 square miles	25 years

The Board may require the installation of street lighting in any subdivision where it deems necessary. In any case all electrical and telephone lines shall be placed underground with appropriate plans being submitted to the Town prior to final approval being granted by the Board.

Where underground utilities are to be furnished from a public source, all necessary mains, branch offsets to each lot, and fire hydrants shall be installed by the subdivider, as approved by the corporation or municipal department having jurisdiction, and to the satisfaction of the governing body, and without expense to the Town.

4.23 Sediment and Erosion Control:

a) General

The purpose of this section is to control soil erosion and the resulting sedimentation from occurring in subdivision areas by requiring proper provisions for water disposal and the protection of soil surfaces during and after construction in order to promote the public health, safety, convenience and general welfare of the community.

b) Standards

The following standards shall be observed by the subdivider in the design, layout and engineering of the proposed subdivision in both the Preliminary Layout Phase (Section 4.08) and the Final Plat Phase (Section 4.09).

1. Stripping of vegetation, regrading or other development shall be done in such a way that will minimize soil erosion.
2. Whenever practical, natural vegetation shall be retained, protected, and supplemented.
3. The disturbed area shall be kept to a minimum and the duration of exposure shall be under a maximum of 6 months. In no case shall completed areas be left past October 1 without being seeded.
4. Temporary seedings and/or mulching shall be used to protect exposed critical areas during development.
5. Provisions shall be made to accommodate the increased runoff caused by changed soil and surface conditions during and after development.
6. Sediment in the runoff water shall be trapped until the disturbed area is stabilized by the use of sediment basins or other acceptable methods.
7. Diversions, sediment basins, and so forth, shall be constructed prior to any on-site grading or disturbance of existing surface vegetation.

4.24 Open Space Shown on Town Master Plan: Where a proposed park, playground, or other open space shown on the Master Plan is located in whole or in part in a proposed subdivision, the Board shall require substantial compliance with such Master Plan.

As a condition of approval of the Final Plat, the Board may require that the area shown thereon as open space be offered for dedication to the Town. The Board shall not require such dedication in excess of fifteen (15) percent of the total area of the subdivision without reasonable compensation, and if the Town does not take steps within a period of one (1) year from the date of approval of the subdivision plat to acquire the portion of the open space in excess of said fifteen (15) percent, the subdivider may submit to the Board a plan for subdivision of such portion, provided such additional subdivision does not exceed the total number of family dwelling units permitted by the zoning regulations for the applicable district, and meets requirements of these subdivision regulations.

4.25 Other Open Space: If no such open space, park or playground is shown on the Town Master Plan within the boundaries of a proposed subdivision, the Board may, where it deems appropriate, require that the plat show one or more sites of character, size, shape and location suitable to be used as community open space or park, in area not to exceed fifteen (15) percent of the total area of the subdivision. The site(s) shall be offered for dedication to the Town, or homeowners association with covenants acceptable to the Board, by the subdivider. The Board shall not require such dedication in excess of fifteen (15) percent of the total area of the subdivision without reasonable compensation, and if the Town does not take steps within a period of one year from the date of approval of the subdivision plat to acquire the portion of the open space in excess of said 15 percent, the subdivider may submit to the Board a plan for subdivision as indicated in 4.24 of these regulations. The subdivider may of his/her own volition exceed the above area requirements.

In the case of cluster subdivision or planned unit development, open space shall not be less in area than as provided in the Master Plan and/or zoning regulations, and/or as indicated in 4.24 and 4.25 of these regulations. Such areas of open space, whether privately or publicly owned, shall have a sufficient legal restriction recorded in the Sullivan County Register of Deeds to assure permanence of use as open space. Open space land in private ownership shall be deeded in such a way that will assure operation or maintenance of the land in an orderly manner suitable for the purpose intended.

4.26 Development of Open Space: On land to be used as active recreation open space, undesirable growth and debris shall be removed. Wooded and brook areas shall be left natural; active recreation open spaces shall be graded properly to dispose of surface water, and shall be seeded with lawn grass. There shall be no depositing, dumping, or storage of waste, or other natural or man-made material, supplies, or equipment on any subdivision land designated as open space unless approved by the Planning Board prior to commencing the work. No work, removal, or filling shall be done, nor shall the existing natural characteristics of open space land be altered from original condition, until the subdivider's plans for recreational

development of said open space have been reviewed and approved by the Board as part of the Final Plat submission. The Board may, however, determine that the best place to dispose of stumps is under a suitable cover of open space land on the property.

4.27 Trees and Planting: Due regard shall be given to preservation of existing trees, shrubbery, and other landscaping appropriate to the area being subdivided. The subdivider shall comply with the following requirements:

a. To the fullest extent possible, all existing trees and shrubbery shall be preserved by the subdivider. Special consideration shall be given to the arrangement and ultimate improvement or development of the lots to this end. Precautions shall also be taken to protect existing trees, shrubbery and vegetation during the construction of roads and utilities.
b. Where any land other than that included in public rights-of-way is to be dedicated to the public use, the subdivider shall not remove any trees from the site without written permission from the Planning Board.
c. Topsoil moved during the course of construction shall be re-distributed so as to provide at least six (6) inches of cover to all disturbed areas of the subdivision. At no time shall topsoil be removed from the site without written permission from the Planning Board.
d. All disturbed areas which are not covered by structures or paving shall be properly seeded or replanted by the subdivider.

4.28 Fire Protection: The purpose of this standard is to specify minimum requirements for water supply for fire fighting that will provide a reasonable degree of protection to life and property in the area.

Standards

The following standards shall be observed for all developments of four (4) or more dwellings:

1. There shall be at least 2,000 gallons of usable water available for each dwelling in the development. Total content of tank, reservoir, pond, or cistern shall not be less than 10,000 gallons usable water. (above figured on single and two-family dwellings, 1,200 square feet and under.)
2. Water supply shall be located to be available at all seasons of the year so that no more than 1,000 feet of hose has to be laid to the furthest building to be protected.
3. When questions develop not covered by this standard, the National Fire Protection Association Standard 1231 or most recent Town approved Association Standard will be used.

4. All commercial applications will be considered on an individual basis and the National Fire Protection Association Standard 1231 or most recent Town approved Association Standard will be used to determine the occupancy hazard and the fire protection required.

5. All proposals shall be reviewed by the Fire Department, and the Department shall sign off during the Final Plat phase after the subdivider complys with Town fire regulations.

4.29 Monumentation: Permanent survey monument shall be set in the boundary of rights-of-way at intersecting streets, point of curvature and point of tangency of curves, though the point of intersection of short curves may be used instead, where such is practical at the discretion of the Town Engineer. Monuments shall be placed on one side of the street only and at only one corner of intersecting streets. Adjacent monumented pointes shall be inter-visible.

Monuments shall be tied in to a public street intersection, U.S.G.S. benchmark or other recognized existing monument. Monument locations shall be shown and properly dimensioned on the final plat.

Monuments shall be of stone, concrete, or other material acceptable to the Town Engineer, and not less than 4" in diameter or square, and not less than 42" long. Concrete monuments shall be reinforced with steel rods, and a plug, brass plate, or pin shall serve as the point of reference. If stone, a drilled hole shall serve as the point of reference and a magnetic rod or other suitable metal shall be placed adjacent to the monument to allow for recovery.

Iron pipes shall not be considered permanent monuments for the purpose of these Regulations.

4.30 Wetlands: The purpose of this section is to acknowledge the significance that wetlands/prime wetlands have to the Town, and to indicate that Town standards shall be specified toward their protection as described in state statutes, Wetland Board guidelines and Town intent.

The Board will utilize criteria including the following in a thoughtful evaluation process: soils, flora, fauna, food chain protection, hydrology, historical/archeological and/or scientific importance, outstanding geomorphological features, aesthetics, size, other selected issues appropriate to the protection of these areas.

SECTION 4A – OPEN SPACE DEVELOPMENT

4A.01 Definition

An "Open Space Development" is defined as a subdivision conforming to Section VII of the Goshen Zoning Ordinance, where, instead of subdividing the entire tract into lots meeting the minimum lot size otherwise required by the Goshen Zoning Ordinance, a similar number of dwelling units or buildings is clustered on lots or building sites of reduced dimensions, with the remaining land conserved as open space.

4A.02 Standards

An Open Space Development shall conform to all of the standards for a Major Subdivision as set forth in Section 4 of these Regulations, "Plan Requirements." In addition, all requirements of Section VII of the Goshen Zoning Ordinance, regarding Open Space Developments, will apply.

4A.03 Procedure for Review

The procedures for review of Open Space Development applications shall be the same as those set forth in these Regulations for Major Subdivisions. In addition, the Planning Board shall evaluate the layout of any proposed Open Space Development as set forth in Section VII of the Goshen Zoning Ordinance, regarding Open Space Developments.

4A.04 Determination of Density

As set forth in Section VII.E of the Zoning Ordinance, the dwelling unit density permitted in an open space development, except where the Planning Board grants a density bonus, shall be no greater than would be permitted for a conventional non-open-space development on the same parcel of land under all zoning provisions applicable to such conventional development, including but not limited to steep slope, wetlands, and floodplain provisions. In cases where there is disagreement over what the permitted density for such a conventional development would be, an applicant may voluntarily prepare, or the Planning Board may in its discretion require the applicant to prepare, a rough plan of a conventional layout, in such detail as may be required for the applicant to demonstrate the basis of the applicant's density calculations. However, in light of the desirability of encouraging the open space development option, the Board shall make an effort to reach agreement with the Applicant on a density calculation without requiring such a plan, and such an agreement shall not be subject to later challenge if the claimed error is within the limits of the Board's 20% bonus discretion.

4A.05 Submission Requirements

Submission requirements shall be the same as for a Major Subdivision as set forth in Section 4, together with the additional submissions as required by the Goshen Zoning Ordinance regarding Open Space Developments.

SECTION 4B PHASED DEVELOPMENT

4B.01 Phased Development

The approval procedure for phased development of any subdivision shall be as follows:

a) The entire subdivision plan shall meet the requirements of the Preliminary Layout. Subdivider shall complete the entire Preliminary Layout step and receive the recommendations of the Board as provided in Section 3.03.

b) The first portion to be developed (Phase 1) shall meet the requirements of the Final Plat in accordance with Section 4.

c) Review of succeeding phases by the Board shall proceed in one of three ways:

1) No Change: When there are no changes from the accepted Preliminary Layout, the Subdivider may proceed to presentation of the Final Plat.

2) Minor Change: A minor change shall be one with respect to the approved plan's basic land and building site allocation in terms of use and density, type and variety facilities, and dwelling units. The Board may, in its discretion, hold a public hearing on the proposed change after notification to all abutters. If a public hearing is not required by the Board, then the Minor Change shall be considered and approved at a public meeting. After approval by the Board, the Subdivider may proceed to presentation of the Final Plat.

3) Major Change: Any requested change which, in the Board's judgment, does not qualify as a minor change, shall be required to be resubmitted as a separate subdivision plan for review as a Major Subdivision in accordance with these Regulations including the Preliminary Layout, Section 3.03.

SECTION 4C – FUTURE SUBDIVISIONS

4C.01 Further Subdivision or Re-subdivision of Subdivided Land

For a period of 10 years following the approval of any subdivision under these regulations, any application to further subdivide or re-subdivide any portion of the land for which the approval was granted shall be reviewed as a major subdivision. Such a new application shall not be evaluated in isolation, but rather shall be treated for review purposes as a modification of the already approved subdivision, with all substantive regulations being applied to the combined impacts and effects of both applications as a unified whole.

SECTION 5 ADMINISTRATION AND ENFORCEMENT

5.01 Modifications: The requirements of the foregoing regulations may be modified when, in the opinion of the Board, after public hearing, specific circumstances surrounding a subdivision, or condition of the land in such subdivision, indicate that such modification will properly carry out the purpose and intent of the Master Plan and of these regulations. Notice of such hearing shall be given not less than fifteen (15) days prior to the date thereof by publishing in a newspaper of general circulation the date, time and place of the hearing and shall designate the location of the land in question and the nature of the modification being sought.

5.02 Interpretation: In the matters of interprepation of these regulations the opinion of the Board shall prevail.

5.03 Acceptance of Streets and/or Utilities: Nothing herein is intended to modify the requirements of law with reference to the acceptance of streets and/or utilities by the Town. Nothing herein is intended to modify or control the construction, reconstruction, or extension of streets and/or utilities by the Town or State.

5.04 Other Regulations: Where these regulations are in conflict with other local ordinances, the more stringent shall apply.

5.05 Enforcement: These regulations shall be enforced by the Board or its duly authorized representative.

5.06 Penalties: As provided in RSA 36:27, any owner, or agent of the owner, of any land located within a subdivision, who transfers or sells any land, before a plat of the said subdivision has been approved by the Planning Board and recorded or filed in the Office of the Register of Deeds shall forfeit and pay a penalty of five hundred (500) dollars for each lot or parcel so transferred or sold; and the description by metes and bounds in the instrument of transfer or other document used in the process of selling or transferring shall not exempt the transaction from such penalties. The Town, through its solicitor or other official designated by its council, may enjoin such transfer or sale and may recover the said penalty by civil action.

5.07 Appeals: Any person, aggreived by an official action of the Board, may appeal therefrom to the Superior Court as provided by RSA 36:25-1(c) or 36:34.

5.08 Validity: If any section, subsection, or phrase of these subdivision regulations is found for any reason to be invalid by a court of competent jurisdiction such decision shall not affect the validity of the remaining portion of these regulations.

5.09 Amendment: These regulations may be amended or rescinded by the Board but only following a public hearing on the proposed change. A copy of these regulations or amendments or exceptions thereto shall be certified by the majority of the Board and filed with the Board of Selectmen, Town Clerk and the Sullivan County Register of Deeds.

5.10 Effective Date: The effective date of these regulations shall be

5.11 Certification: Certified to be a true copy, attest:

_____

_____

_____

_____

_____

ADOPTED:

AMENDED: _____, 19__

_____, 19__

_____, 19__

APPENDIX A

MAJOR SUBDIVISION PROCEDURE

TOWN OF GOSHEN, N.H.

STEP 1. Landowner decides to subdivide his/her land.

STEP 2. Subdivider has first meeting with the Planning Board to:

a. Discuss the subdivision proposal.
b. Determine review procedure.
c. Obtain copy of municipal subdivision regulations.
d. Determine all municipal and state regulations affecting the proposed subdivision, i.e., zoning approval, access permit, dredge and fill permit, percolation tests etc.

OPTIONAL

e. Subdivider may prepare and/or discuss a conceptual layout of proposed subdivision with the Planning Board.

STEP 3. Subdivider prepares discussion phase information in accordance with Section 3.02.

STEP 4. Subdivider submits discussion phase information to the Planning Board and requrests meeting with the Board to review same.

STEP 5. Planning Board conducts field inspection of the land proposed to be subdivided.

STEP 6. Subdivider has second meeting with the Planning Board to:

a. Review discussion phase information as prepared in accordance with Section 3.02.
b. Receive indication from the Planning Board as to whether or not to proceed with preparation of the preliminary layout.

STEP 7. Subdivider prepares preliminary layout application in accordance with Sections 3.03 and 4.08.

STEP 8. Subdivider submits preliminary layout to the Planning Board and requests meeting with the Board to review same. Note: The preliminary layout should be submitted a minimum of fifteen (15) days prior to the above meeting.

STEP 9. Subdivider has third meeting with the Planning Board to:

a. Review preliminary layout submission
b. Determine necessary State agency approvals.

STEP 10. Planning Board submits preliminary layout to other appropriate local agencies for review and comment.

STEP 11. Subdivider submits subdivision plans to appropriate State agencies for review, comment, and approval where applicable.

STEP 12. Local and State agencies review preliminary layout and return approval and comments to the Planning Board.

STEP 13. Subdivider has fourth meeting with the Planning Board to:

a. Review all Local and State agency approvals and comments on prliminary layout.

STEP 14. Subdivider proceeds with STEP 15 if preliminary review is found satisfactory by Board. If not, subdivider returns to STEP 7 and corrects submission.

STEP 15. Subdivider prepares Final Plat application in accordance with Section 3.04.

STEP 16. Subdivider submits the Final Plat application to the Planning Board and requests meeting with the Board to obtain final approval of the Final Plat. NOTE: The Planning Board must place the subdivision on its agenda for consideration within 30 days of receipt of the Final Plat Submission.

STEP 17. Planning Board notifies subdivider and all abutters of subdivision hearing in accordance with Section 3.05.

STEP 18. Subdivider attends Abutters Hearing.

STEP 19. Subdivider has fifth meeting with the Planning Board to obtain Final Approval of the Final Plat. NOTE: The Planning Board must act to approve or disapprove the Final Plat within 90 days of Receipt of the Final Plat Submission (STEP 16).

STEP 20. Subdivider files approved Final Plat with County Register of Deeds. NOTE: If Final Plat is disapproved by the Planning Board, the Subdivider may appeal to the Superior Court as provided by RSA 36:23-1(c) or 36:34 (See Section 5.07).

APPENDIX B

MINOR SUBDIVISION PROCEDURE

TOWN OF GOSHEN, N.H.

STEP 1. Landowner decides to subdivide his/her land in a manner which conforms to the minor subdivision definition (Section 2.37).

STEP 2. Subdivider has first meeting with the Planning Board to:
a. Confirm that the proposed subdivision is eligible for minor subdivision waiver.
b. Discuss the minor subdivision proposal.
c. Determine review procedure.
d. Obtain copy of municipal and state regulations affecting the proposed minor subdivision, i.e., zoning approval, access permit, dredge and fill permit, percolation tests, etc.

STEP 3. Planning Board conducts field site inspection of the land proposed to be subdivided.

STEP 4. Subdivider prepares Final Plat in accordance with Section 4.1(

STEP 5. Subdivider submits Final Plat to Planning Board for review and approval. NOTE: The Planning Board must place the subdivision on its agenda for consideration within 30 days of receipt of the Final Plat and must act to approve or disapprove the Final Plat within ninety (90) days of said submission (STEP 5).

STEP 6. Planning Board submits the Final Plat to other appropriate local agencies for review, comment, and approval where applicable.

STEP 7. Subdivider submits subdivision plans to appropriate state agencies for review, comment, and approval where applicable.

STEP 8. Local and State agencies review subdivision plans and return approval and comments to the Planning Board.

STEP 9. Planning Board notifies subdivider and all abutters of subdivision hearing in accordance with Section 3.05.

STEP 10. Subdivider has second meeting with the Planning Board to:
a. Review all Local and State agency approvals and comments
b. Attend Abutter's Hearing
c. Obtain Final Approval of the Final Plat.

STEP 11. Subdivider files approved Final Plat with the County Register of Deeds. NOTE: If Final Plat is disapproved by the Plannin Board, the Subdivider may appeal to the Superior Court as provided in RSA 36:23-1(c) or 36:34 (See Section 5.07).

CHECKLIST #2

SUBDIVISION/APPLICATION # _____

ITEMIZED LIST OF INFORMATION NEEDED FOR COMPLETE PLAT APPLICATION FOR MAJOR SUBDIVISION APPROVAL IN THE TOWN OF GOSHEN, NEW HAMPSHIRE

((Items that have an asterisk (*) shall be reviewed by the Board prior to Final Plat Application. If the Board decides that any item(s) are not required on the Final Plat, the developer shall submit a written waiver(s) of request with submission of the Final Plat application in regard to the item(s).))

PROVIDED FOR	NOT PROVIDED	COMMENTS	
			I. GENERAL INFORMATION
____	____	_____	2 permanent film copies, 4 paper prints
____	____	_____	Name of Town and Subdivision
____	____	_____	Name and Address of Subdivider
____	____	_____	Name and Address of Registered Professional Engineer
____	____	_____	Name and Address of Designer
____	____	_____	Name and Address of Registered Land Surveyor
____	____	_____	Names and Addresses of all Abutters
			II. PLAT INFORMATION
			A. GENERAL
____	____	_____	Complete boundaries and area of the entire parcel
____	____	_____	North point, bar scale
____	____	_____	Date
____	____	_____	Revision dates
____	____	_____	Names and addresses of owners of subdivisions and buildings within 200' of subdivision

P	NP	COMMENTS	
____	____	_____	Property Location map
____	____	_____	Intersecting roads and driveways within 200' of subdivision
____	____	_____	Boundaries and designations of zoning districts (if any)
____	____	_____	Land use designation from Master Plan (if any)
____	____	_____	Future proposed subdivisions
____	____	_____	Name and seal of registered engineer and/or registered land surveyor licensed to parctice in N.H.
____	____	_____	Significant natural and man-made features
			B. LOTS
____	____	_____	Existing and proposed lot lines, angles and dimensions
____	____	_____	Lot sizes in square feet and acres
____	____	_____	Consecutive numbering of lots
____	____	_____	Iron pins at lot corners
____	____	_____	All easements accurately located and shown
____	____	_____	Building setback lines
____	____	_____	Accurate location of monuments
____	____	_____	Existing and proposed open space and parks (acreage noted)
____	____	_____	Deed restrictions (if any)
			C. BUILDINGS
____	____	_____	Existing and proposed buildings and accessory buildings
			D. STREETS/ROADS
____	____	_____	Subdivision street plan
____	____	_____	Existing and proposed street right-of-way lines

SUBDIVISION/APPLICATION # _____

P	NP	COMMENTS	
____	____	_____	Widths of streets, travel surface and shoulders
____	____	_____	Existing and proposed street names
____	____	_____	Dimensions of all road tangents, chords, radii, monuments etc.
____	____	_____	Points of curvature and tangency of curved streets
____	____	_____	Road profiles and cross-sections
____	____	_____	Access road application approval and/ or work required (see below)
____	____	_____	Statement of work required on existing streets to meet minimum standards
____	____	_____	Driveway, road applications (proposed possible location)

*E. STREET AND UTILITY PLAN(S)
(May be required on a separate sheet or sheets)

____	____	_____	Existing telephone and electricity poles (location and number of each pole)
____	____	_____	Existing and proposed gas, water and sewer lines
____	____	_____	Other existing and proposed facilities and/or utilities
____	____	_____	Proposed underground telephone and electric lines
____	____	_____	Profiles and grades of storm sewer lines, inlets and culverts
____	____	_____	Watershed calculations including culverts, bridges etc.
____	____	_____	Storm water facilities downstream of subdivision
____	____	_____	Complete plans and profiles of all proposed streets
____	____	_____	Complete plans and profiles of all proposed sanitary and storm sewers
____	____	_____	Location and details of proposed underground facilities
____	____	_____	Any other details pertinent to street and/or utility construction

P	NP	COMMENTS	
			F. FIRE PROTECTION
____	____	_____	Existing and proposed fire protection lanes
____	____	_____	Fire protection details
____	____	_____	Fire protection statement
			G. SOIL INFORMATION
____	____	_____	Topographic contours
____	____	_____	Location of soils
____	____	_____	Location of sewers or percolation and ground water tests
____	____	_____	Statement of soil suitability for subdivision
____	____	_____	Sediment and erosion control details
____	____	_____	Existing and proposed water courses
____	____	_____	Existing and proposed flood prone areas
____	____	_____	Existing and proposed large trees (3 feet or more in diameter)
____	____	_____	Existing and proposed foliage lines
____	____	_____	Existing and proposed significant natural and man-made features
			*SUBDIVISION GRADING PLAN (May be required on separate sheet or sheets)
____	____	_____	Existing and proposed buildings
____	____	_____	Street and lot layout, lots numbered
____	____	_____	Contours of existing and proposed grades
____	____	_____	Final identification of soil erosion and sediment control measure and structures
____	____	_____	Final drawings for flood hazard prevention

P	NP	COMMENTS	
___	___	_____	Final identification of existing and proposed drainage ways, drainage easements, drainage structures and water bodies
___	___	_____	Final slope stabilization details and specifications
___	___	_____	Timing schedule
			H. APPROVALS -- State
___	___	_____	Water Resources Board
___	___	_____	Wetlands Board
___	___	_____	Fish & Game Department
___	___	_____	Public Works and Highway Dept. (when on state road)
___	___	_____	Water Supply and Pollution Control Commission
			Town
___	___	_____	Conservation Commission
___	___	_____	Town Appointed Engineer
___	___	_____	School Board
___	___	_____	Zoning Board
___	___	_____	Fire Department
___	___	_____	Health Officer
___	___	_____	Road Agent
___	___	_____	Town Legal Counsel
			I. OTHER
___	___	_____	Itemized cost estimate
___	___	_____	Statement as to compliance with existing zoning regulations

P	NP	COMMENTS	
____	____	_____	Written acknowledgement of subdivider's responsibility and liability
____	____	_____	Written request for waivers or exceptions by developer
____	____	_____	Planning Board decision in writing on waivers or exceptions
____	____	_____	Time limit for streets and public improvements (not to exceed 3 years)

III. APPROVAL OF TOWN ATTORNEY

____	____	_____	Deed restrictions and covenants
____	____	_____	Conveyances to town
____	____	_____	Easements and rights-of-way descriptions
____	____	_____	Performance Bond
____	____	_____	Maintenance Bond

- -

____	____	_____	IV. AS-BUILT PLANS

CHECKLIST # 1

ITEMIZED LIST OF INFORMATION NEEDED FOR COMPLETE PLAT APPLICATION FOR MINOR SUBDIVISION APPROVAL IN THE TOWN OF GOSHEN, NEW HAMPSHIRE

SUBDIVISION/APPLICATION FILE # _____

((Items that have an asterisk (*) shall be reviewed by the Board prior to Final Plat Application. If the Board decides that any item(s) are not required on the Final Plat, the developer shall submit a written waiver(s) of request with submission of the Final Plat application in regard to the item(s).))

PROVIDED FOR	NOT PROVIDED	COMMENTS	
			I. GENERAL INFORMATION
____	____	_____	2 permanent film copies, 4 paper prints
____	____	_____	Name of Town and Subdivision
____	____	_____	Name and address of subdivider
____	____	_____	Name and address of Registered Professional Engineer
____	____	_____	Name and address of Designer
____	____	_____	Name and address of Registered Land Surveyor
____	____	_____	Names and addresses of all abbutters
			II. PLAT INFORMATION
			A. GENERAL
____	____	_____	Complete boundaries and area of the entire parcel
____	____	_____	North point, bar scale
____	____	_____	Date
____	____	_____	Revision Dates
____	____	_____	Names and addresses of owners of subdivisions and buildings within 200' of subdivision
____	____	_____	Property location map

SUBDIVISION/APPLICATION # _____
MINOR SUBDIVISION

P	NP	COMMENTS	
____	____	_____	Intersecting roads and driveways within 200' of subdivision
____	____	_____	Boundaries and designations of zoning district (if any)
____	____	_____	Land Use designation from Master Plan (if any)
____	____	_____	Future proposed subdivisions
____	____	_____	Name and seal of registered engineer and/or registered land surveyor licensed to practice in N.H.
____	____	_____	Significant natural and man-made features
			B. LOTS
____	____	_____	Existing and proposed lot lines, angles and dimensions
____	____	_____	Lot sizes in square feet and acres
____	____	_____	Consecutive numbering of lots
____	____	_____	Iron pins at lot corners
____	____	_____	All easements accurately located and shown
____	____	_____	Building setback lines
____	____	_____	Accurate location of monuments
____	____	_____	Existing and proposed open space and parks (acreage noted)
____	____	_____	Deed Restrictions (if any)
			*C. BUILDINGS
____	____	_____	Existing and proposed buildings and accessory buildings
			D. SOIL INFORMATION
____	____	_____	Location of sewers or percolation and ground water tests
____	____	_____	Existing and proposed water courses

SUBDIVISION/APPLICATION # _____
MINOR SUBDIVISION

P	NP	COMMENTS	
___	___	_____	Existing and proposed flood prone areas
___	___	_____	Existing and proposed well and septic system information
			*E. SUBDIVISION GRADING PLAN
___	___	_____	Street and lot layout, lots numbered
___	___	_____	Existing and proposed buildings
___	___	_____	Contours of existing and proposed grades
___	___	_____	Final identification of existing and proposed drainage ways, drainage easements, drainage structures and water bodies
___	___	_____	Final identification of soil erosion, and sediment control measure and structures
___	___	_____	Final drawings for flood hazard prevention
___	___	_____	Final slope stabilization details and specifications
___	___	_____	Timing schedule
			F APPROVALS
			State
___	___	_____	Water Resources Board
___	___	_____	Wetlands Board
___	___	_____	Fish & Game Department
___	___	_____	Public Works and Highway Dept. (when on state road)
___	___	_____	Water Supply and Pollution Control Commission
			Town
___	___	_____	Conservation Commission

SUBDIVISION/APPLICATION FILE # _____
MINOR SUBDIVISION

P	NP	COMMENTS	
____	____	_____	Town Appointed Engineer
____	____	_____	School Board
____	____	_____	Zoning Board
____	____	_____	Fire Department
____	____	_____	Health Officer
____	____	_____	Road Agent
____	____	_____	Town Legal Counsel
			G. OTHER
____	____	_____	Statement as to compliance with existing zoning regulations
____	____	_____	Written acknowledgement of subdivider's responsibility and liability
____	____	_____	Written request for waivers or exceptions
____	____	_____	Planning Board decision in writing on waivers or exceptions
____	____	_____	Time limit for streets and public improvements (not to exceed 3 years)
			III. APPROVAL OF TOWN ATTORNEY
____	____	_____	Deed restrictions and covenants
____	____	_____	Conveyances to town
____	____	_____	Easements and rights-of-way descriptions
____	____	_____	Performance Bond
____	____	_____	Maintenance Bond

FLOWCHART FOR SUBDIVISION APPROVAL
(See Checklist #1 and #2)

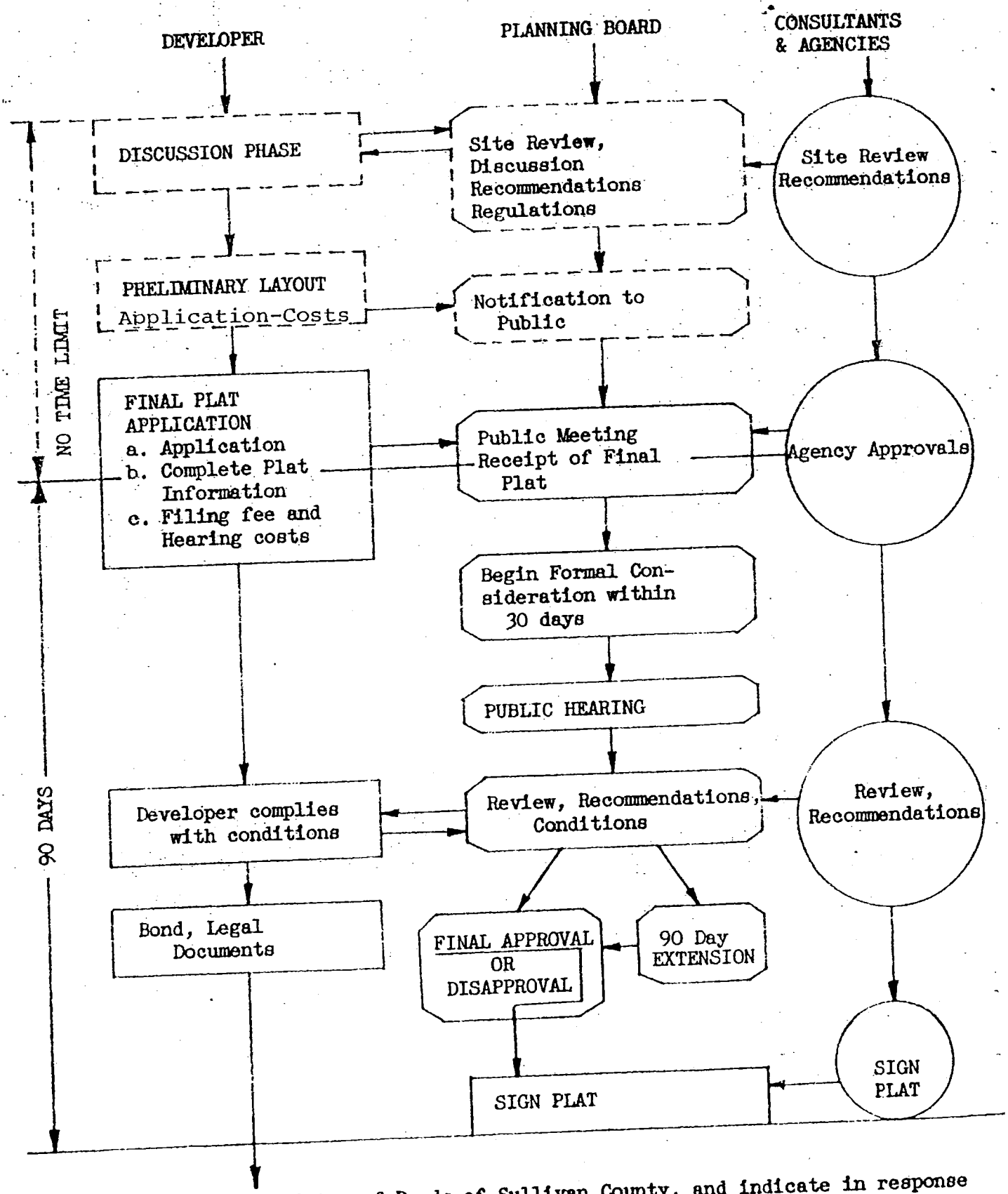

File with Register of Deeds of Sullivan County, and indicate in response to Town the Volume and Page where registered.

APPENDIX-D

CONSTRUCTION DETAILS
AND
SPECIFICATIONS
FOR
LAND DEVELOPMENT

TOWN OF GOSHEN, N.H.

Approved by the Planning Board July 28, 1981

Amended _____

Adopted by the Board of Selectmen _____

Prepared by: Sullivan County Engineer
221 Broad Street
Claremont, N.H. 03743
May 5, 1981

TABLE OF CONTENTS

PAGE		
D-1	INTRODUCTION	
D-3	SECTION 1 - CONSTRUCTION SPECIFICATIONS	
	1.01	Construction of Roads, Streets, Drainage Facilities, and Fire Protection Facilities
	1.02	Basis of Construction
	1.03	Roadway Excavation
D-4	1.04	Subgrade Preparation
	1.05	Road Base (Foundation Course)
D-5	1.06	Asphaltic Concrete Pavement
D-6	1.07	Drainage Structures
D-7	1.08	Fire Protection Facilities
	SECTION 2 - CONSTRUCTION DETAILS	
1	Typical Local Street	
2	Typical Collector Street	
3	Typical Cul-De-Sac Detail	
4	Typical Turnarounds	
5	Typical Culvert Section	
6	Typical Concrete Headwall Detail	
7	Typical Mortared Stone Masonry Headwall Detail	
8	Typical Dry Stone Masonry Headwall	
9	Typical Metal End Section Detail	
10	Typical Pond and Hydrant Section	
11	Typical Dry (Non-Pressure) Hydrant Detail	
12	Typical Driveway Profile	
13	Typical Driveway Approach	

INTRODUCTION

This booklet has been prepared to serve as a guide for, and a control over, the development of property within the Town of Goshen.

The intent is to assure proper design and construction of facilities which may be turned over to the Town for perpetual maintenance. Further, it is to assure proper design and construction of facilities which will affect the health and general welfare of the community and to prevent depreciation of property values. Thirdly, it is to assure that development is compatible with the long range development plan of the Town.

It is not the intent of the booklet to conflict with zoning policies or general overall supervision of development by the Board of Selectmen and Planning Board; rather it is intended to supplement such policies by providing the technical details necessary to carry out general policy in a successful manner.

This booklet does not concern itself with control over building design or construction. These matters are covered elsewhere by Town policy and ordinance.

This booklet is divided into three general sections. The first section is this "Introduction" which deals with general procedures to be followed. The intent is to provide a guide which will assure rapid, expeditious approval of subdivision plans as well as the approval of completed works which are to be turned over to the Town for dedication.

The second protion of the booklet is entitled, "Section I, Design" and provides a guide for Subdivider's Engineers in the preparation of plans for the subdivision.

The third portion of the booklet is entitled, "Construction", and provides the construction specifications. Subdividers and their Engineers bear the responsibility of requiring their development contractors to familiarize themselves with these specifications and to carry them out in order that maintenance-free utilities be constructed.

With residential development increasing, it has become necessary to set up certain guidelines to assure that such development proceed in an orderly but expeditious manner. To implement the procedures required by law and good planning the town has developed a "Subdivision Review Procedure Outline in the Town of Goshen", a copy of which is enclosed in the Subdivision Regulation for the Town of Goshen. It is recommended that Subdividers and their Engineers follow these guidelines for their own benefit in expediting approvals.

The "Subdivision Review, Procedure Outline" is a general outline only. Subdividers are required to retain competent engineering and legal counseling to deal with technical matters and provide the necessary detailed information. Normally the first step will be to come before the Planning Board with a "discussion phase" plan for a miscellaneous or informal hearing. This is usually the first opportunity that the Planning Board has to realize a particular parcel of land is proposed for development. This knowledge permits the Planning Board to initiate studies to determine what problems it must consider in granting the subsequent formal approval. Questions of traffic circulation, water supply, sanitary sewage collection and disposal, and drainage are some of the major items. Following this "discussion phase" with the Planning Board the subdivider can make application for an advertised formal hearing before the Planning Board.

It should be noted that it is the subdivider's responsibility to provide the Town Engineer with preliminary plans at least fifteen (15) days prior to the presentation of the plans to the Planning Board. This time schedule is necessary in order that an intelligent office and field investigation can be made relative to the proposed submittal and appropriate comments returned to the subdivider's engineer for revision where necessary. In the same manner it is required to present final plans fifteen (15) days prior to the Formal Hearing.

SECTION 1 - CONSTRUCTION SPECIFICATIONS

1.01 Construction of Roads, Streets, Drainage Facilities and Fire Protection Facilities

A. Materials- General: All materials to be used shall meet the requirements as specified, unless the same are altered by specific requirements under any itemized specification or by modifying notes shown on the approved plans. In the absence of specific reference to specifications, the material(s) to be incorporated into any project and the work performed are intended to conform to the New Hampshire Department of Public Works and Highways specifications, as determined by the Town Engineer.

1.02 Basis of Construction:

In order to assure the structural integrity of the subgrade and crushed stone foundation course, the following rules shall apply:

A. Underground utilities shall be constructed outside the traveled shoulder areas and ditches of the roadway.

B. Where utilities and/or culverts cross the roadway, the trenches shall be backfilled with acceptable bank run gravel or select earth backfill (approved by the Town Inspector) and shall be compacted in 6 inch layers with vibrating compaction equipment. Note: The developer will be responsible for assuring compaction of all trenches crossing the roadway including utility trenches.

C. After properly shaping and obtaining approval from Town designated agencies of the subgrade, the crushed stone foundation course may be placed. The entire foundation course including shoulders, shall be thoroughly compacted with vibratory compaction equipment.

D. Where embankments (fills) are constructed under the roadway section, the entire height of the embankment shall be constructed with the use of standard and appropriate compaction equipment. This equipment shall consist of sheepscoat rollers, vibratory rollers or similar equipment. The embankment area shall be compacted to 95% modified AASHO density. If required by the Town Inspector, the developer shall provide certified compaction test results from a competent soils testing laboratory.

1.03 Roadway Excavation

The entire roadway section shall be cleared and grubbed. All sod and topsoil is also to be removed from the roadway section and stockpiled on the site for later use. All stumps, brush, trees, and other rubbish shall be disposed of in a manner satisfactory to Town Ordinance or Regulation.

1.04 Subgrade Preparation

A. Work: All topsoil, other unsuitable soil and organic material shall be removed from the area under the "Typical Road Sections" prior to constructing or shaping the subgrade.

B. Method: The subgrade shall be excavated and shaped following the depth and alignment of the stakes established by the Project Engineer for this purpose. The stakes shall be at intervals of no more than 50 feet and 25 feet when ordered by the Town Engineer.

After excavation to the proper depth, the subgrade shall be graded and crowned 3/8 inch for each foot of width on each side of the centerline and as shown on the "Typical Road Section". The subgrade shall then be rolled with a 10-ton or vibratory roller. Any unsuitable material found below the subgrade shall be removed and replaced with bank run gravel or select earth backfill approved by the Town Inspector. Should the subgrade become rutted, it shall be regraded and rolled prior to the placement of the crushed stone base.

No base material shall be placed over unstable trenches or soft spots in the subgrade. Should such a complication exist, the soil is to be removed and replaced with bank run gravel or select earth fill approved by the Town Inspector and thoroughly reshaped and compacted.

1.05 Road Base (Foundation Course)

A. Work: The contractor shall furnish and place a crushed stone base in two (2) lifts as shown on the "Typical Road Sections".

B. Material: The crushed stone shall conform to the standards established by ASTM Specification D2940 for Graded Crushed Stone Bases and Sub-bases. Where gravel base material is to be used, certification of the materials compliance with Division 300, Section 304, Items 1-3 of the New Hampshire Department of Public Works and Highways Specifications for Road and Bridge Construction must be supplied to the Town Engineer at least 14 working days in advance of the use of such material. All such certification must be compiled by a competent soils testing laboratory. In no case shall the material passing the No. 200 sieve be greater than 10% by weight.

C. Method: The Base shall be placed on a graded, crowned and compacted subgrade free of ruts and disturbed earth as follows:

1. After proper shaping and compaction of the subgrade, the first layer of Course Dense Graded Crushed Stone Base shall be placed and graded, maintaining the specified crown of 3/8 inch per foot of width and thoroughly compacted with a

vibratory compactor producing a minimum dynamic vibration force of 27,000 lbs.

2. The final 2 inches of the fine dense Graded Crushed Stone Base shall be placed and graded to conform to the lines and grades shown on the plans and "Typical Road Section". The surface shall be graded, maintaining the specified crown of 3/8 inch per foot of width and thoroughly compacted as noted in 1 above. Any open or boney areas shall be choked with Crushed Stone Dust and thoroughly compacted. Compaction shall be from the outside edge of the shoulder to the centerline.

1.06 Asphaltic Concrete Pavement

A. Work: When specified, the contractor shall furnish and construct a two-course asphaltic concrete pavement placed to conform to the required thickness and cross section as shown on the plans and on the "Typical Road Section" and further described in the following specifications.

B. Material: All material shall conform to Division 400, Section 401, Plant Mix Pavements of the New Hampshire Department of Public Works and Highways Specification for Road and Bridge Construction. Upon requrest, the contractor shall furnish the Town Engineer with written certification of the materials compliance with these specifications.

C. Method: Prior to the placement of the material, the base material will be cleared of any foreign material, e.g., soil, and graded and compacted as noted in 1.05 above.

The asphalt will be placed in 2 courses consisting of a 2 inch binder course and a 1 inch wearing surface. The material will be placed with a self-propelled, crawler mounted, asphalt spreader operated by competent operators. Further, placement will comply with the specifications noted in 1.07 B below. It should be noted that all thicknesses noted above are final compacted thicknesses and not placement thicknesses. Placement of the asphalt shall take place between May 1st and October 1st and only when the air and ground temperature, in the shade, at the paving site is 40 degrees or above. Weather conditions shall otherwise be satisfactory for proper handling and finishing the asphalt. At no time will "cold patch", "winter mix" or "farmers mix" be used.

Protection of new pavement shall be provided until properly set. This protection is necessary on subdivision streets where the traffic is primarily by cars starting and stopping or by trucks.

1.07 Drainage Structures:

Culverts shall be constructed of vitrified clay, concrete, asbestos cement or bituminous coated corrugated metal pipe. Other pipe materials will be accepted only after approval by the Town Engineer.

a. All culverts shall be designed for proper strength classificatio by the Subdivider's Registered Professional Engineer with the calculations being submitted with the plans. When specifying the pipe to be used, the depth of cover, nature of foundation soil, type of bedding and trench width shall be considered. When design conditions cannot be met in the field, the subdivider shall be responsible for providing extra strength pipe, extra strength bedding, cradle or encasement so that design conditions are met. All pipe which falls under the roadway shall be designed so that it is capable of carrying H-20 loading at the pipe depth.

b. All culverts shall have both the inlet and outlet ends of the pipe protected by means of headwalls or rip-rap. Headwalls are to be constructed of either concrete or stone and shall be protected from any possible frost action. In no case will frozen concrete or mortar be accepted. When rip-rap is to be used, conforming to the roadway slopes, it shall comply with New Hampshire Department of Public Works and Highway Specification for Road and Bridge Construction Section 583, Rip-Rap. When approved by the Town Engineer 5 inch Crushed Stone may be considered. In the case of headwall construction, the following specifications from the above noted source shall apply:
   1. Section 520, Concrete Masonry-Class B Concrete
   2. Section 544, Reinforcing Steel
   3. Section 570, Stone Masonry

c. Any special structures or construction shall be properly designe in accordance with and approved by the Town Engineer prior to th commencement of the work. Sufficient time must be allowed for the review of plans and specifications. Drainage inlets, headwalls, etc. shall be designed in accordance with these specifications and the typical details that follow.

d. All pipe, fillings, etc. shall be handled carefully so as to prevent damage. All joint surfaces and fittings shall be clean and shall fit in such a manner that all joints will be tight and free of leaks. Proper workmanship and tools shall be used when handling and installing the pipe so that the quality and strength is not impaired. Where, in the judgement of the Town Inspector, the quality of strength of the pipe has been impaired the materials will be rejected.

e. Necessary precautions shall be taken at all times to prevent the flooding of adjacent property. Drainage ditches, necessary stream channel location or other positive means of diverting/controlling the water shall be employed. Water shall not be allowed to drain into a pipe or trench under construction. Water shall not be allowed to accumulate in the trenches but shall be drained or pumped away from the work area to established drainage channels.

f. In no case shall pipe be installed without grade stakes being set to the line and grade shown on the approved plans.

g. Prior to the installation of the pipe, the trench bottom shall be shaped flat to the designed line and grade. Low areas shall be filled to grade with suitable material and thoroughly compacted prior to installing the pipe. Where solid rock or boulders are encountered, the material shall be removed to a depth of at least 12 inches below grade, and backfilled with suitable material and thoroughly compacted. When the trench bottom becomes soft, spongy or otherwise unsuitable, and special conditions are not specified on the approved plans, all such material under the pipe and for a width equal to 3 diameters of the pipe shall be removed and replaced with gravel or other suitable material and thoroughly compacted.

h. Care must be taken when backfilling around and over the pipe. The backfill around the pipe and for a minimum height of 12 inches above the pipe will be free of stone in excess of 4 inches in its greatest dimension. This material will also be compacted in accordance with manufacturers specifications so that the pipe will be properly protected against deformation.

i. Where open drainage courses are constructed, all disturbed areas are to be seeded and/or rip-rapped as soon as possible after construction. When an area is not completed prior to October first, temporary seeding shall be applied to reduce erosion during the winter and spring.

1.08 Fire Protection Facilities

The criteria established in Section 4.23, Fire Protection in the Subdivision Regulations for the Town of Goshen will be complied with. Materials will comply with those specified on the "Typical Details" unless otherwise approved in writing by the Fire Chief for the Town of Goshen and/or the Town Engineer in concurrence with the Fire Chief.

A. Total Water Supply Required: This shall be the total minimum water supply available under all conditions. This further means the water available when the supply is covered with ice, at its seasonal low water level, silted in or similar phenomenon that can be technically or reasonably predicted.

B. Access: At no time shall any form of legal constraint(s) be placed on access to the water supply limiting access for fire fighting purposes. Access to the water supply will be provided so that fire equipment will be able to reach the supply at all times. Should the water supply be on private property, the Town shall be supplied with the necessary easements for access. An access road a minimum of 12 feet in width and complying with the construction criteria for a "Local Minor Street" shall be provided with a sufficient turnaround. In no case shall the turning radii be less than 50 feet or grades steeper than 8%.

C. Drainage: Care shall be taken to accommodate drainage along the access road and eliminate siltation of the water supply. All exposed areas shall be seeded and/or rip-rapped as soon as possible to reduce erosion and subsequent siltation. All rip-rap shall comply with Section 1.08 B Drainage Structures above.

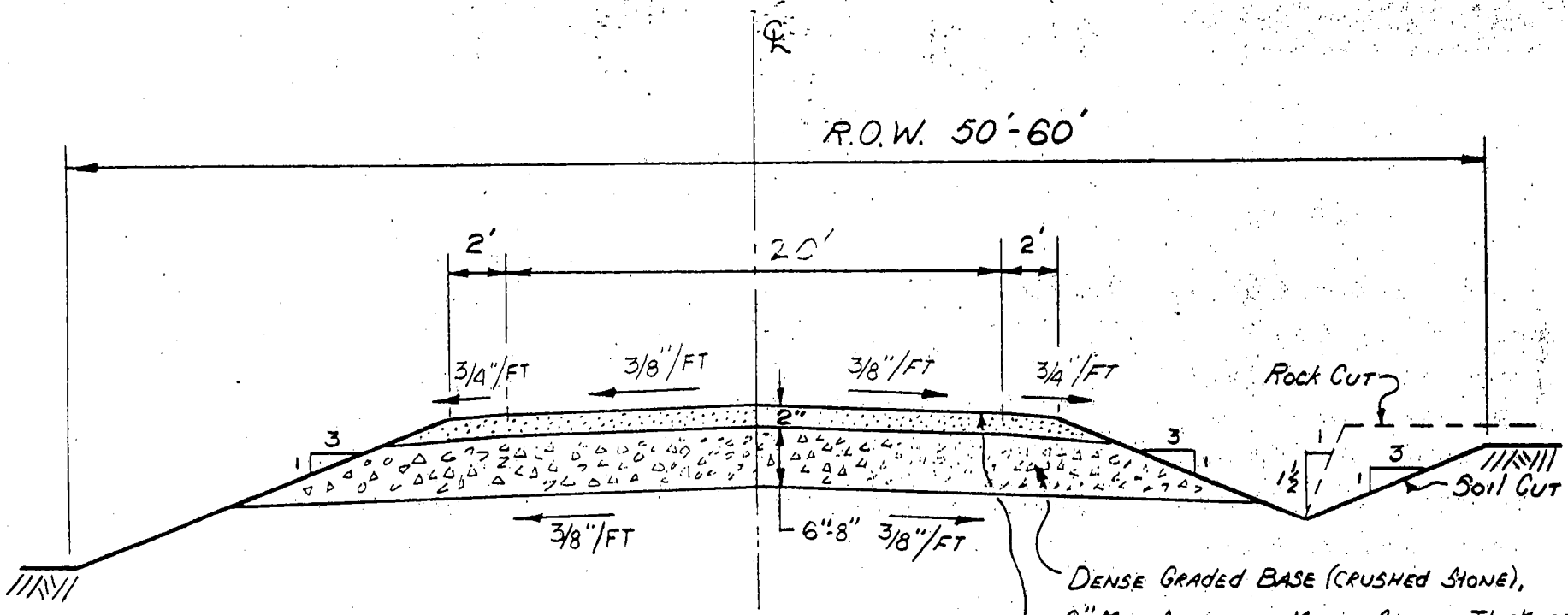

Dense Graded Base (Crushed Stone), 2" Max. Aggregate. Minor Street Thickness To Be 6" Major Street Thickness To Be 8."

Surface Course To Consist Of 2" Of Dense Graded Base (Crushed Stone), 3/4" Max. Aggregate. All Open Or "Boney" Areas Are To Be Covered With Stone Dust To Provide A Tight Surface. Width Variations Are Based On Street Classification. See Section 4.17 - Subdivision Regulations. Should Crushed Gravel Be Approved, The Minimum Depth Will Be 12" In Thickness & 16" Respectively.

All Exposed Slopes Shall Be Covered With Top Soil & Seeded As Soon As Possible. All Slopes In Excess Of 5' In Height May Be Reduced To 2:1 Provided An Approved Guide Rail System Is Provided. Cut Slopes In Solid Rock May Be Cut To 1:1½ Provided The Rock Is Solid And Free Of Loose Broken Rock.

Typical Local Street

Minor = 0-50 Vehicles/Day

Major = 50-100 Vehicles/Day

Not To Scale

Sullivan County Engineer		
By: RP	CK: [illegible]	5/5/81

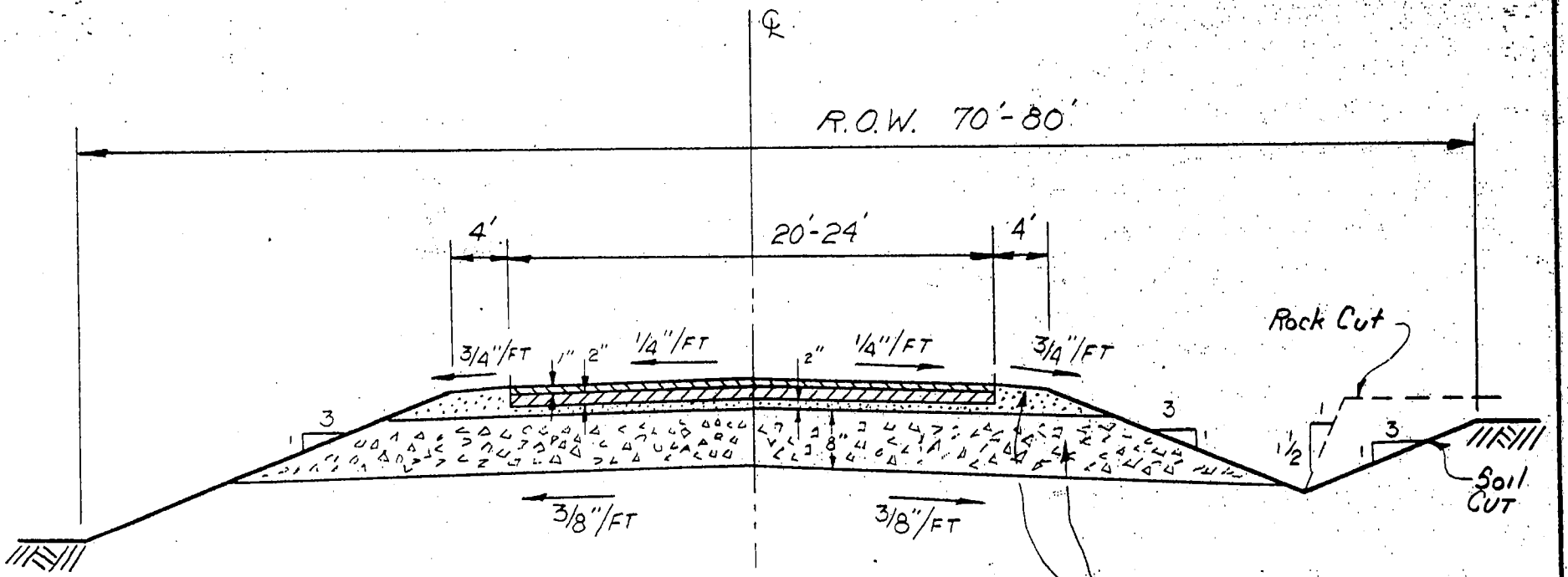

All Exposed Slopes Shall Be Covered With Top Soil & Seeded As Soon As Possible. All Slopes In Excess Of 5' In Height May Be Reduced To 2:1 Provided An Approved Guide Rail System Is Provided. Cut Slopes In Solid Rock May Be Cut To 1:1 1/2 Provided The Rock Is Solid And Free Of Loose Broken Rock.

Typical Collector Street

Minor = 100-250 Vehicles/Day
Major = 250 → Vehicles/Day

Not To Scale

See Notes On Dense Graded Base For Local Streets. Width Variations Are Based On Street Classification. See Section 4.17 Subdivision Regulations Should Crushed Gravel Be Approved, The Minimum Depth Will Be 16" In Thickness.

Sullivan County Engineer		
By: R.P.	Ck: LHS	5/5/81

2

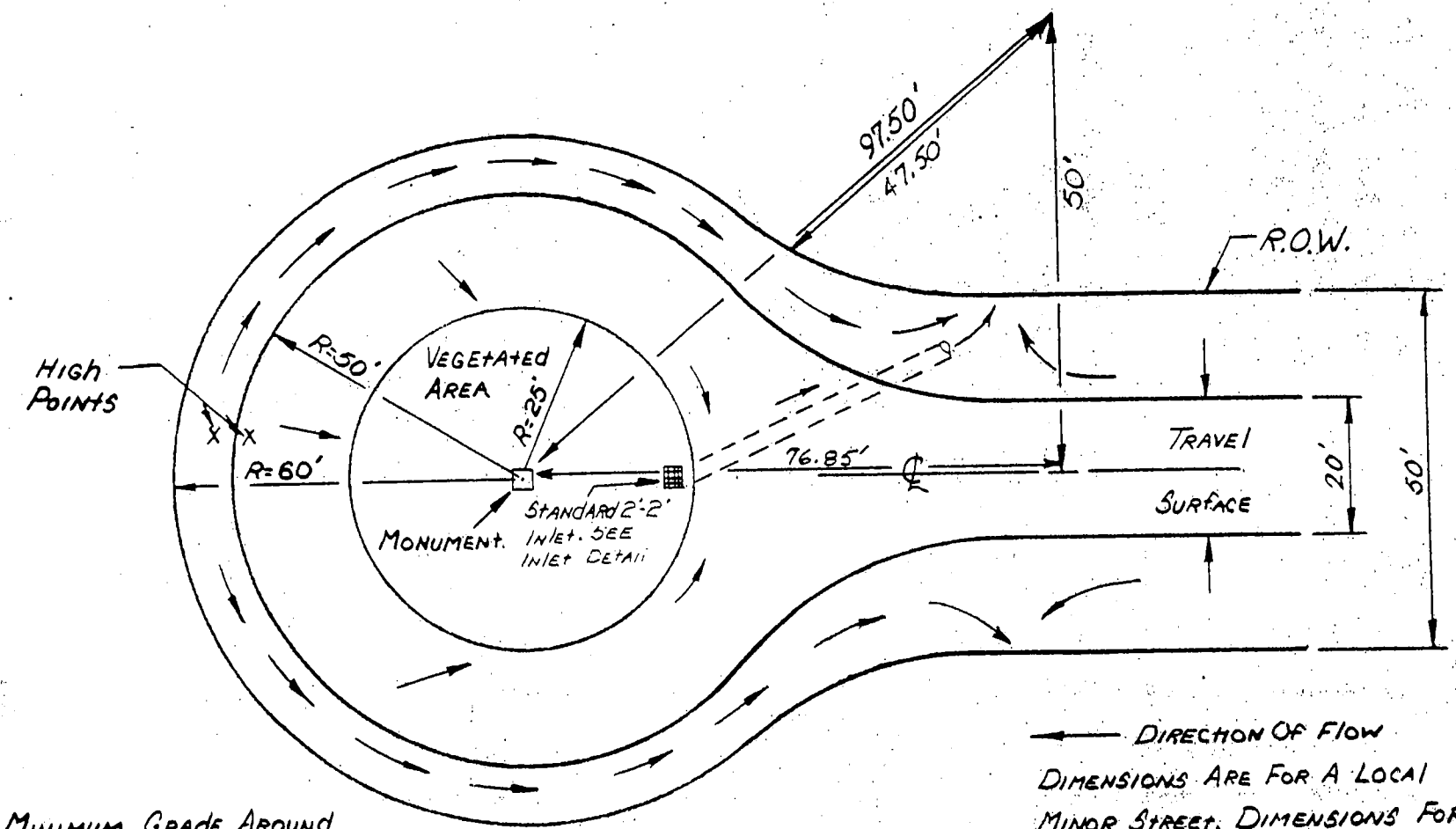

Direction Of Flow

Dimensions Are For A Local Minor Street. Dimensions For Other Street Classifications Will Vary.

Minimum Grade Around Cul-De-Sac To Be 0.5%. Variations Of This Detail Must Be Approved By The Town Engineer.

Typical Cul-De-Sac-Detail

Sullivan County Engineer		
BY: R.P	CK: LHO	5/7/81

3

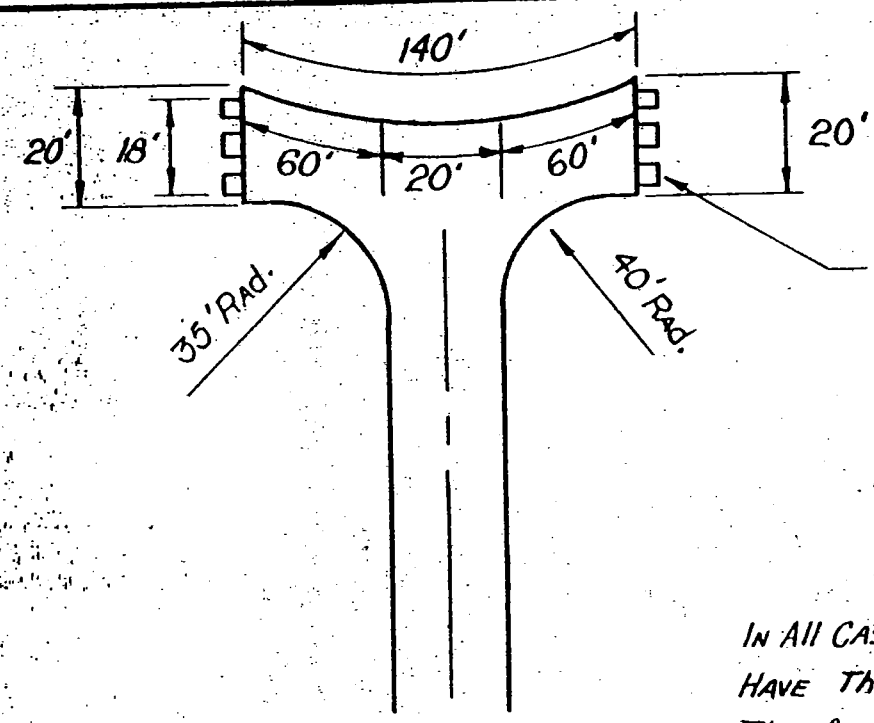

6" X 8" X 6' Cedar Guard Posts At End Of Pavement 2.5' To Be Above Grade Or As Approved By The Planning Board Or Their Agent.

In All Cases The Turnarounds Are To Have The Same R.O.W. Width As The Street Entering. R.O.W. To Extend A Min. Of 10' Beyond Pavement.

No Private Driveways To Exit Into Or Within 20' Of Turnaround. Unless Otherwise Approved By The Planning Board, These Turnarounds Are Not To Be Used On Streets In Excess of 1500' In Length.

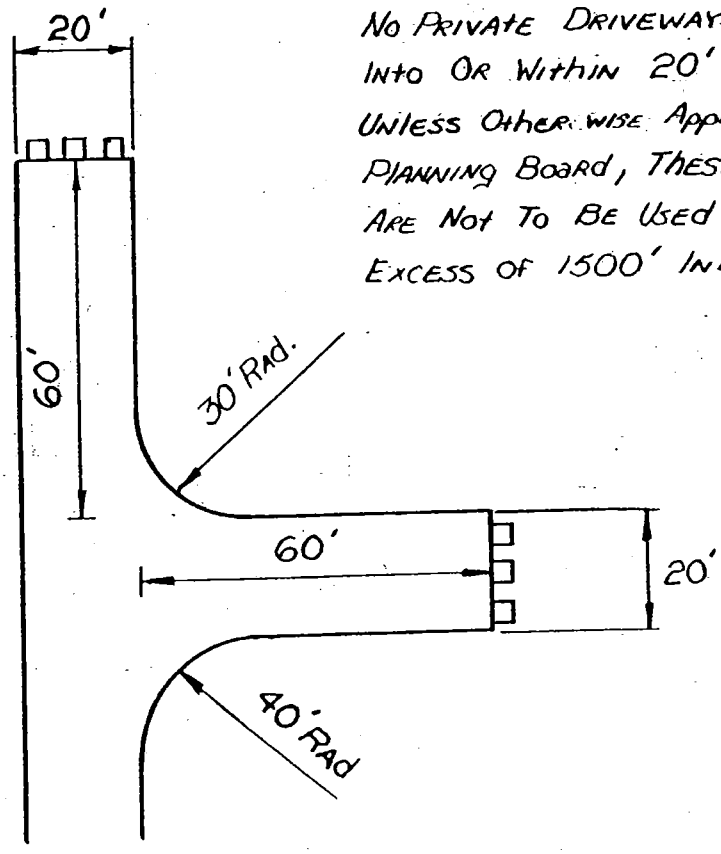

Typical Turnaround

Sullivan County Engineer		
By: R.P.	CK: LHL	5/7/81

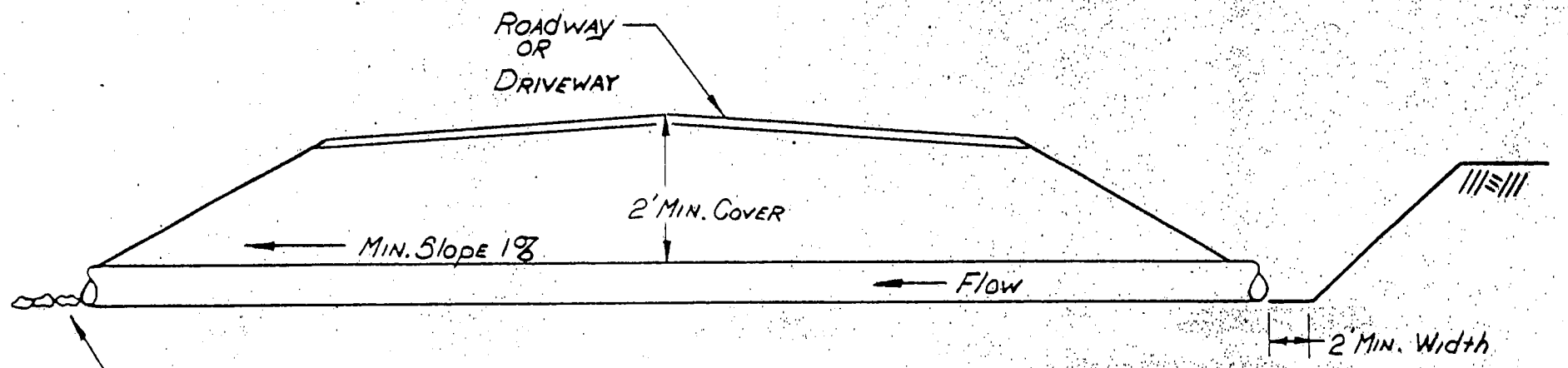

Stream Invert To Be Rip-Rap A Min. Of 5' Downstream.

Typical Culvert Section

See Section II. 6. Drainage Structures For Details Related To Pipe Design, Bedding, Headwalls, Rip-Rap, Etc., See Typical Headwalls, Rip-Rap & End Sections Also.

In All Cases, The Inlet & Outlet Ends Of The Culverts Will Be Protected By Means Of A Headwall, Rip-Rap, End Section Or Other Method Approved By The Town Engineer.

Sullivan County Engineer		
By: R.P.	CK: [illegible]	5/6/81

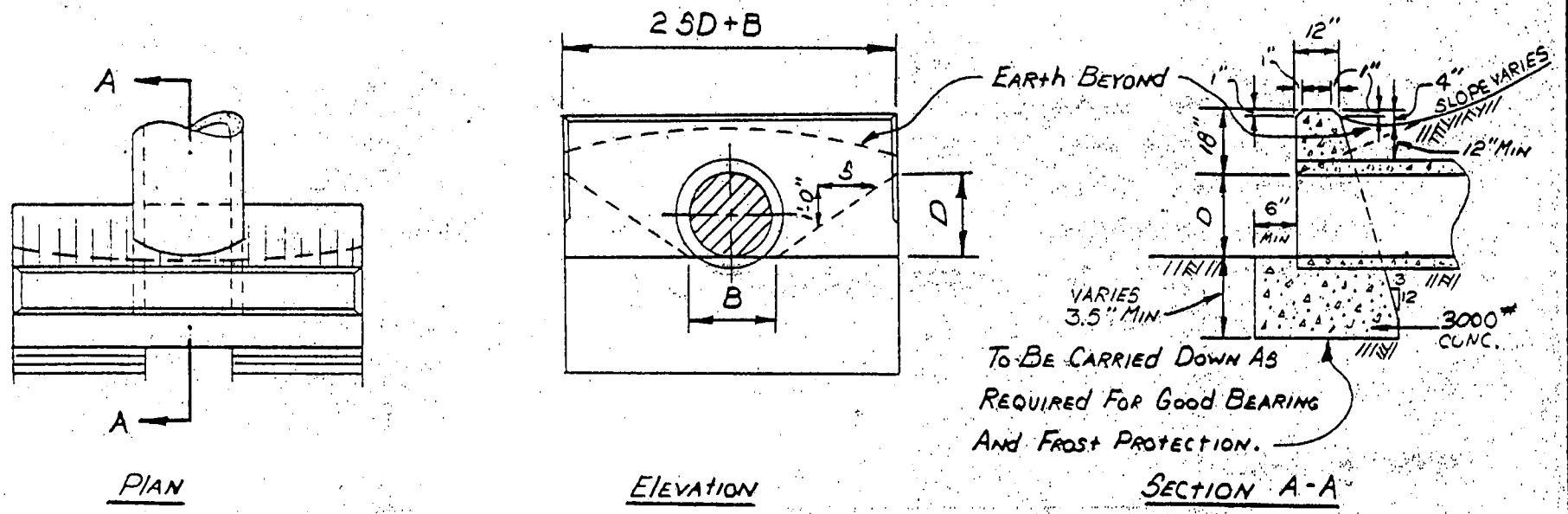

TYPICAL CONCRETE HEADWALL

SULLIVAN COUNTY ENGINEER		
BY: R.P.	CK: JHL	5/7/81

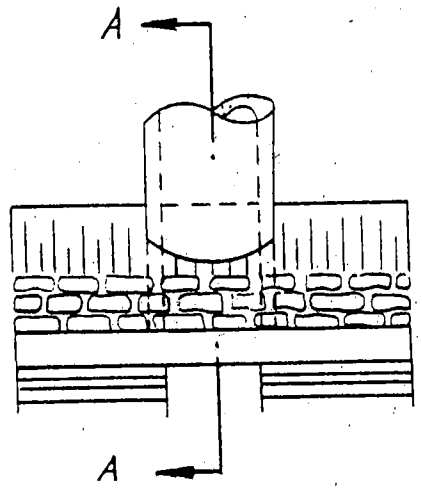

PLAIN

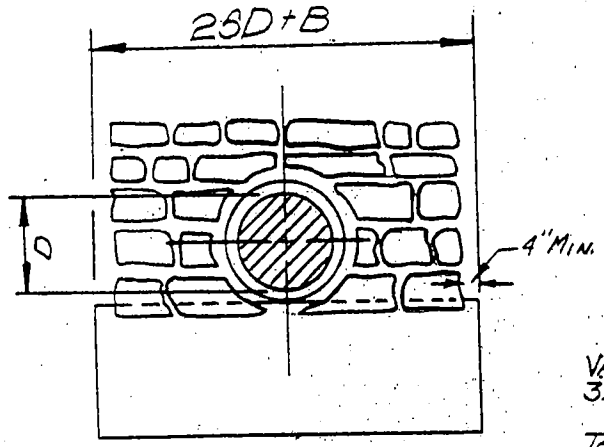

ELEVATION

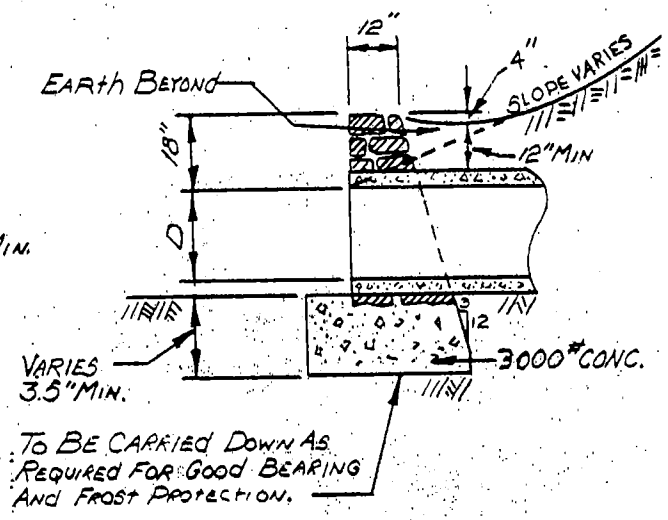

SECTION A-A

TYPICAL MORTARED STONE MASONRY HEADWALL

SULLIVAN COUNTY ENGINEER		
BY: R.P.	CK: LHZ	5/12/81

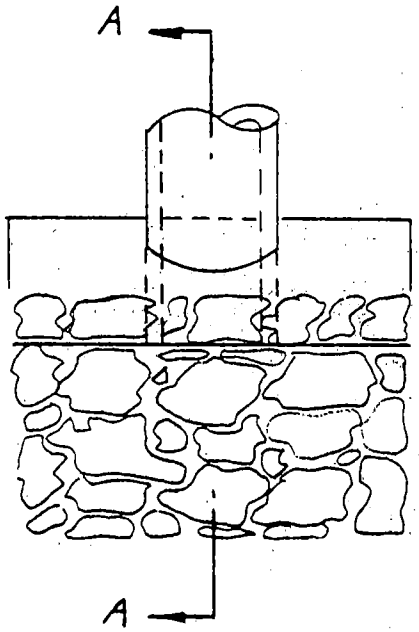

PLAIN

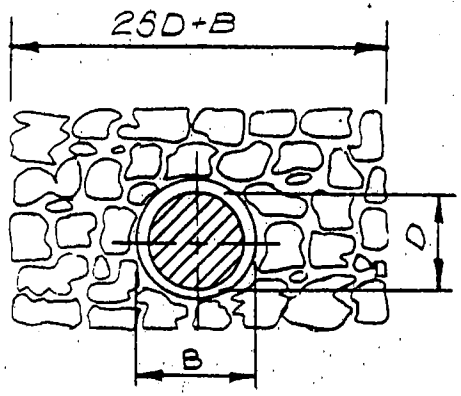

ELEVATION

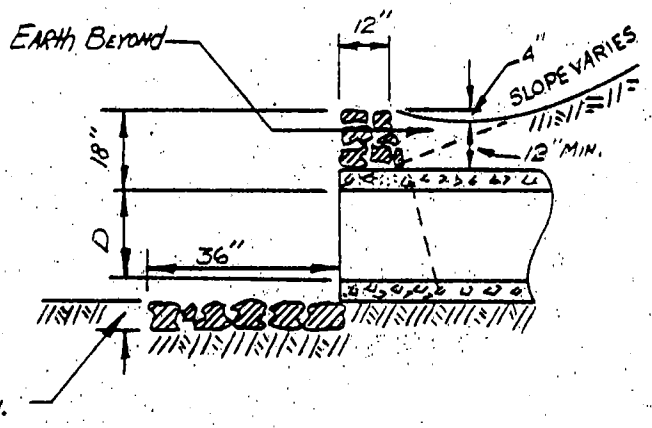

SECTION A-A

TYPICAL DRY STONE MASONRY HEADWALL

SULLIVAN COUNTY ENGINEER		
BY: R.P.	CK: LHL	5/12/81

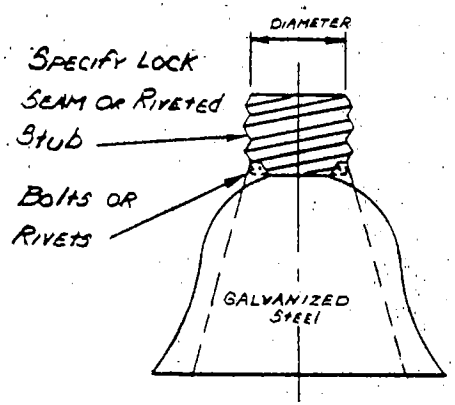

TYPICAL PLAN

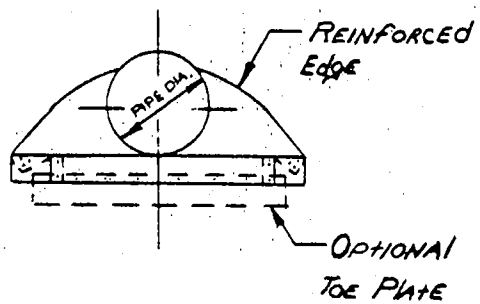

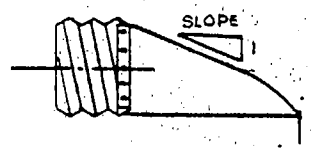

TYPICAL ELEVATION

TYPICAL CROSS SECTION, PIPE OR PIPE-ARCH, WITH #3 CONNECTION TO LOCK SEAM OR RIVETED STUB

TYPICAL METAL END SECTION

SULLIVAN COUNTY ENGINEER		
BY: R.P.	CK: KHS	5/8/81

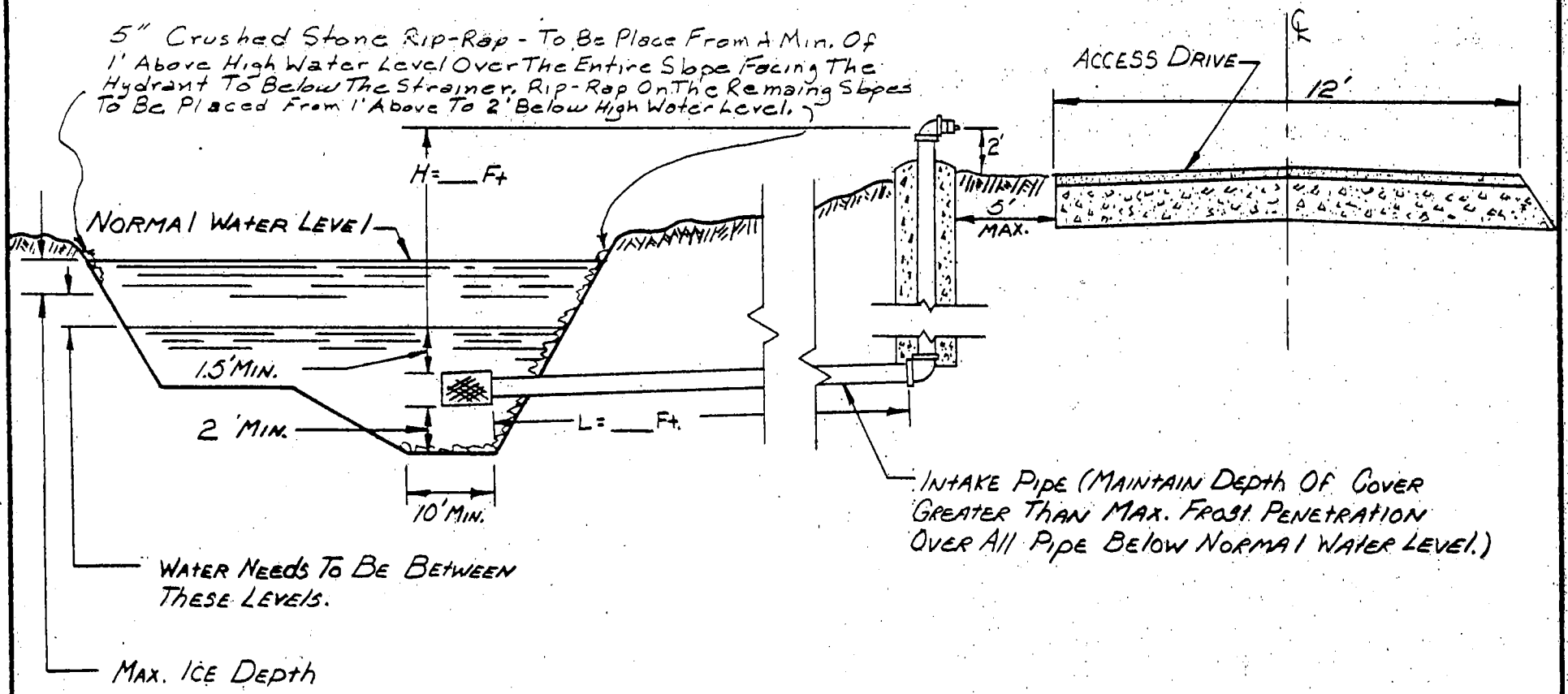

TYPICAL POND & HYDRANT SECTION

SULLIVAN COUNTY ENGINEER		
BY: R.P.	CK: JHJ	5/12/81

H_t Must Not Exceed H_a

Total Suction lift	H_t = Static lift + Head loss in Hydrant and Screen + Head loss in Intake Pipe. H
For 250 g.p.m.	$H_t = (\quad) + (1.1) + (\frac{L \times 0.65}{100})$ $H_t = (\quad) + (1.1) + (\quad) =$ ____ Ft.
For 500 g.p.m.	$H_t = (\quad) + (4.4) + (\frac{L \times 2.6}{100})$ $H_t = (\quad) + (4.4) + (\quad) =$ ____ Ft.
For 750 g.p.m.	$H_t = (\quad) + (10.3) + (\frac{L \times 5.9}{100})$ $H_t = (\quad) + (10.3) + (\quad) =$ ____ Ft

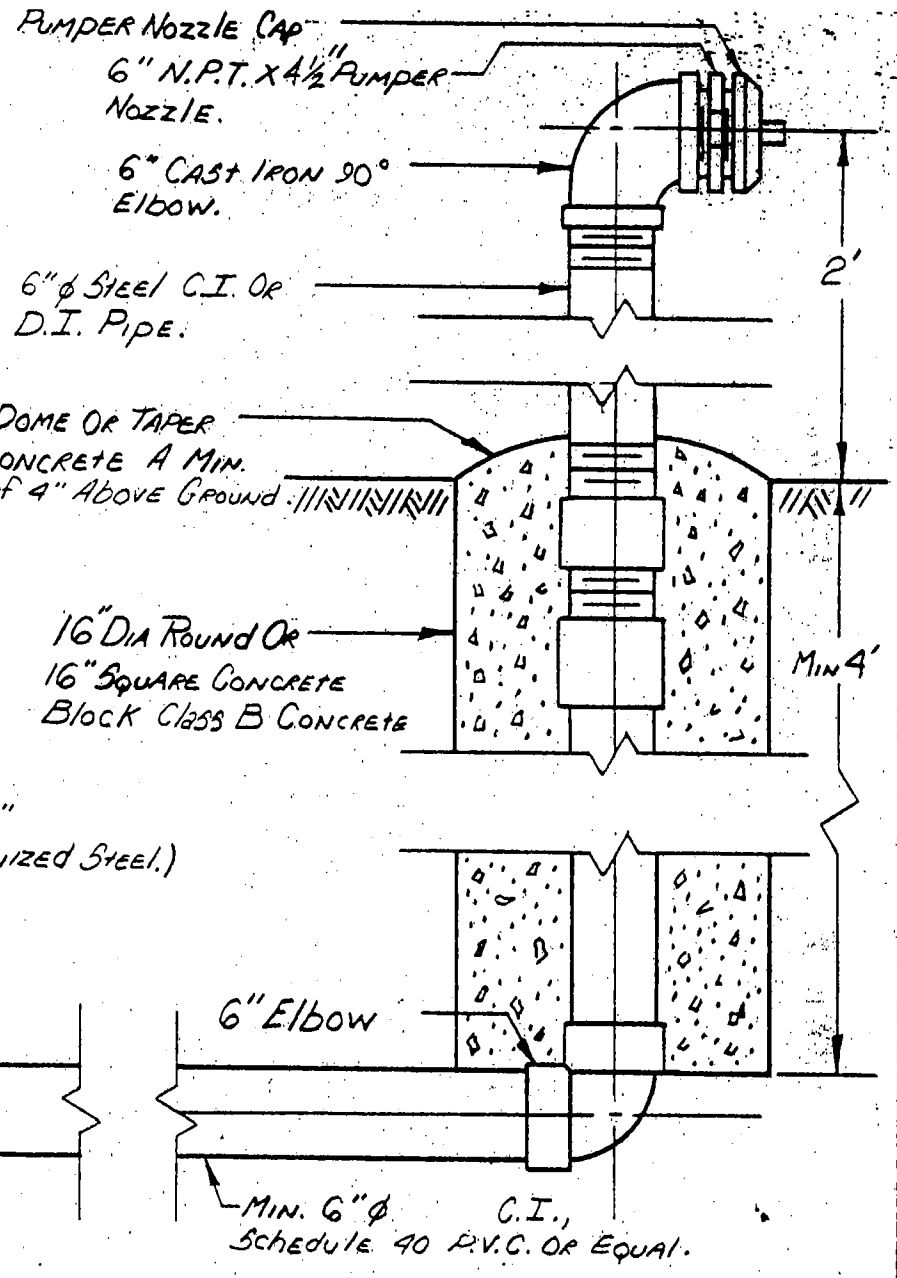

ALTITUDE (FEET)	ALLOWABLE LIFT (FEET) (HA)
0	23.0
500	22.5
1000	22.0
1500	21.6
2000	21.2
3000	20.4
4000	19.6
5000	18.8

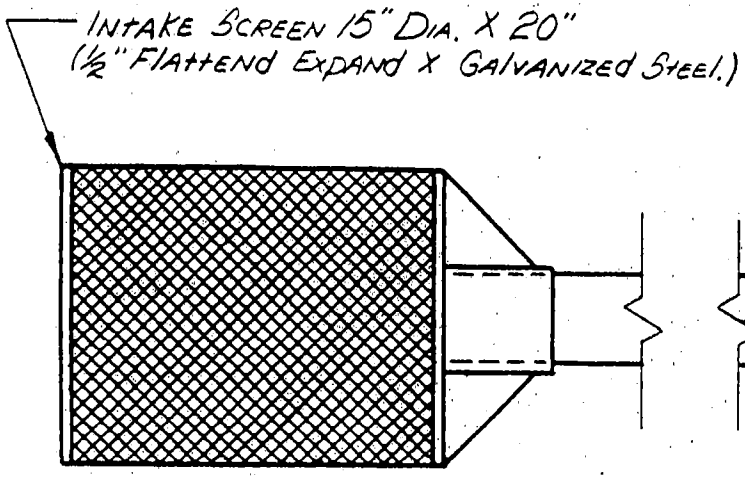

Typical Detail Of Hydrant

Sullivan County Engineer		
By: R.P.	Ck: [illegible]	5/11/81

Applicant Will Be Responsible For Restoration Of Any Damage Within The R.O.W. & Will Seed, Fertilize, etc. To Prevent Erosion & Run Off Water From Entering The Road.

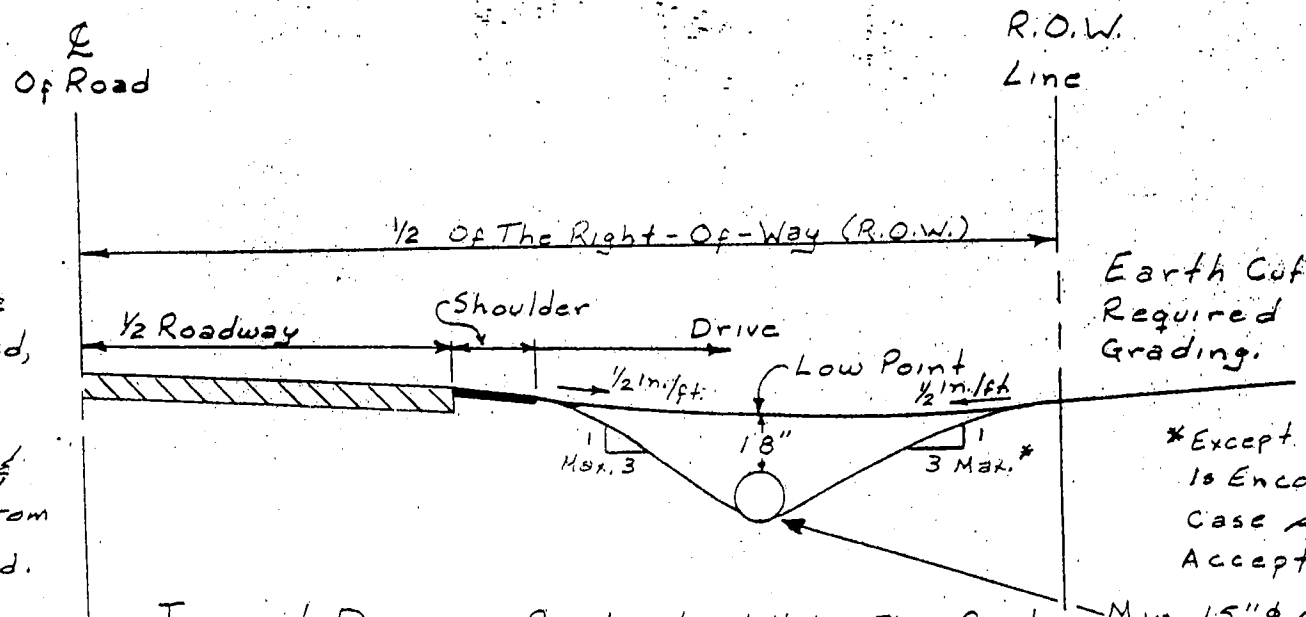

Earth Cutting May Be Required For Proper Grading.

*Except When Ledge Is Encounted. In That Case ⊿ Will Be Acceptable.

Min. 15"φ Culvert-Larger If Ordered By The Road Agent. Exact Location, Slope, Size, Etc., To Be Determined By The Road Agent And/Or Town Engineer.

Typical Driveway Profile - Land Higher Than Road

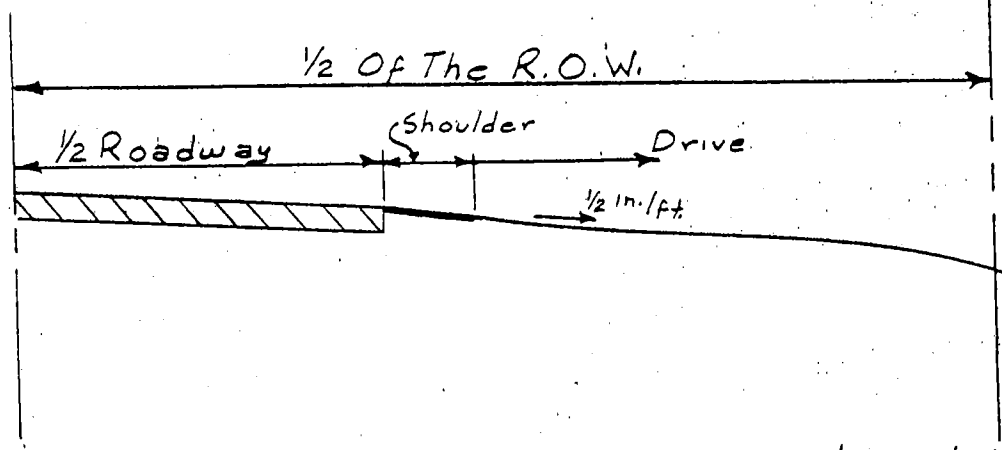

Earth Fill May Be Required For Proper Grading.

Typical Driveway Profile - Land Lower Than Road & No Ditch

Not To Scale

Sullivan County ENGINEER	
L.H. Geil	1/16/96

TYPICAL DRAINAGE EASEMENT

THIS AGREEMENT, made and executed this_____day of_____, 19__, by (name of landowner) of (address of landowner), New Hampshire, hereinafter called the GRANTOR(S), and

The Town of_____, New Hampshire, hereinafter called the GRANTEE(S),

WITNESSETH THAT:

WHEREAS, THE GRANTEE(S) desire(s) to use and do limited maintenance over the lands of the GRANTOR(S), His Heirs, Successors and Assigns for the purpose of flowing surface water over said lands.

NOW THEREFORE, the GRANTOR(S), His Heirs, Successors and Assigns by virtue of the exercise by the GRANTEE(S) of the rights herein granted, and subject to the conditions and for the uses and purposes herein mentioned and no other, the GRANTOR(S), His Heirs, Successors and Assigns do hereby convey and release unto the GRANTEE(S), an easement over and upon Lot(s) Number_____of the_____ Subdivision situated in the Town of_____, County of Sullivan, New Hampshire and as shown on a Final Plat for said Subdivision, Number_____, Dated_____day of_____, 19__ and recorded in Vol._____, Page_____at the Sullivan County Registrar of Deeds_____day of_____, 19__, to wit:

The GRANTEE(S) shall have the right to flow surface waters over the above-described land and as shown on said Final Plat as well as the right to enter on said land for such limited maintenance as deemed necessary by the GRANTEE(S).

The Recommended Minimum Drive Width Is 10' With A Minimum Of 5' Each Side For Drainage & Snow Storage.

See Typical Culvert Section For Culvert Installation.

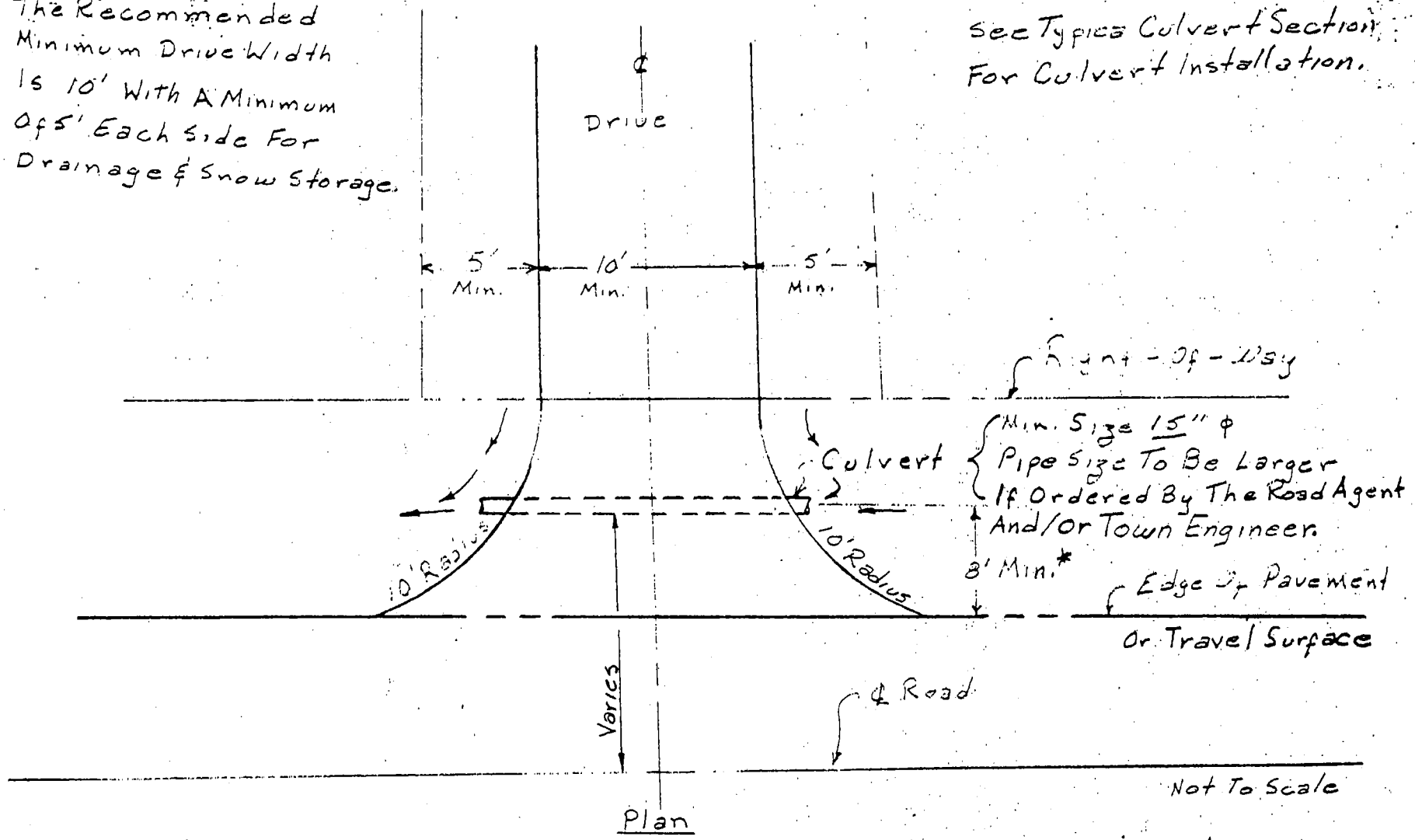

Plan

Typical Driveway Approach

← Direction Of Flow

* Unless Otherwise Approved By The Planning Board Or Their Agent.

Sullivan County ENGINEER	
L.H.Geil	1/14/76

The GRANTOR(S) shall convey to the GRANTEE(S) a strip of land parallel to the water course(s) shown on said Final Plat a minimum of_____feet in width measured_____feet perpendicular to each side of the thread of the water course(s) for the purpose(s) herein mentioned.

IN WITNESS WHREEOF, the parties hereto have set their hands and seals the day indicated above.

(Signed)_____ L.S. _____
(GRANTOR) (Witness)

(Signed)_____
(GRANTOR)

(Signed)_____
(GRANTEE)

(Signed)_____
(GRANTEE)

CERTIFICATE OF ACKNOWLEDGEMENT

State of New Hampshire)
) ss.
County of)

On this, the_____day of_____, 19__, before me_____, the undersigned officer, personally appeared _____, known to me to be the person whose name is subscribed to the within instrument and acknowledged that he/she executed the same for the purposes herein contained.

In witness whereof I hereunto set my hand and official seal.

_____

_____
(Title of Officer)

Town of Goshen Subdivision Regulations -- Appendix F
Special Flood Hazard Areas

For subdivisions that involve land designated as "Special Flood Hazard Areas" (SFHA) by the National Flood Insurance Program (NFIP):

A. The Planning Board shall review the proposed development to assure that all necessary permits have been received from those governmental agencies from which approval is required by Federal or State law, including Section 404 of the Federal Water Pollution Control Act Amendments of 1972, 33 U.S.C. 1334.

B. The Planning Board shall require that all proposals for development greater than 50 lots or 5 acres, whichever is the lesser, include Base Flood Elevation (BFE) data within such proposals (i.e. floodplain boundary and 100-year flood elevation).

C. The Planning Board shall require the applicant to submit sufficient evidence (construction drawings, grading and land treatment plans) so as to allow a determination that:

1. All such proposals are consistent with the need to minimize flood damage;

2. All public utilities and facilities, such as sewer, gas, electrical, and water systems are located and constructed to minimize or eliminate flood damage; and

3. Adequate drainage is provided so as to reduce exposure to flood hazards.